BONOMI GROUP

VALPRES

**WAFER PN16 V-BALL**




# 723004 C1-C2-C3

## STAINLESS STEEL

Full bore flanged ball valve PN16, in stainless steel A351-CF8M equipped with V-Ball for pressure and flow regulation with ISO 5211 pad and Antistatic Device.

**V-Ball**

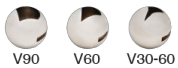


## Technical specifications

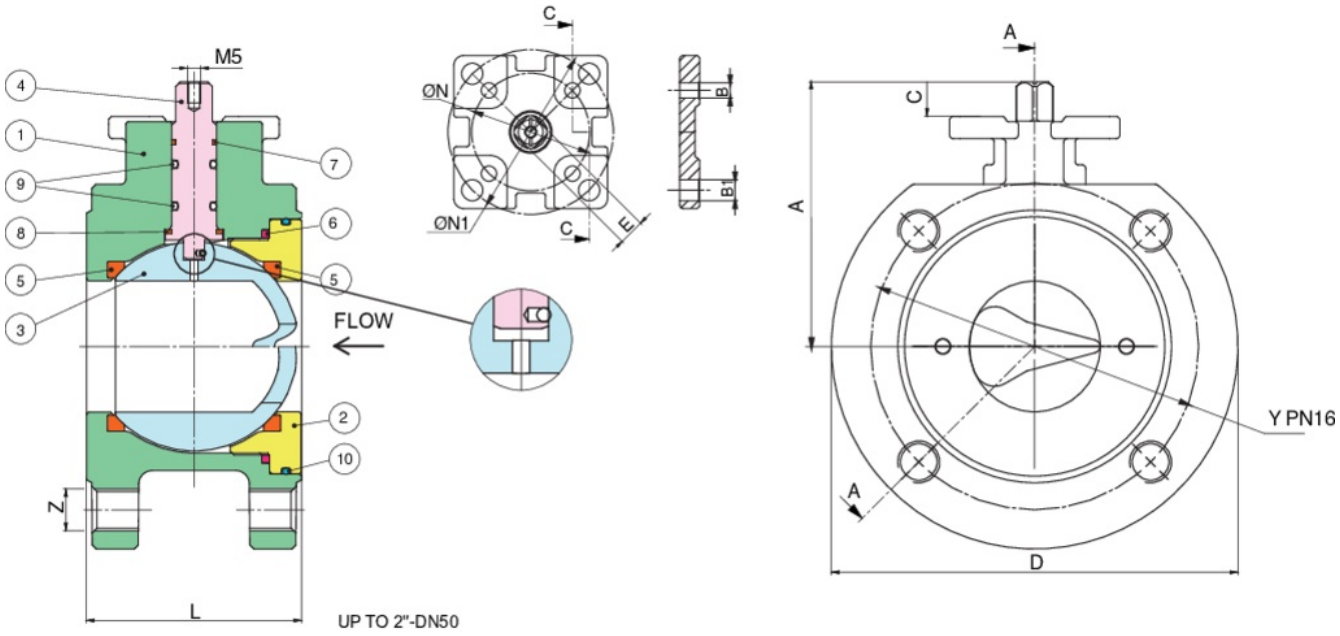

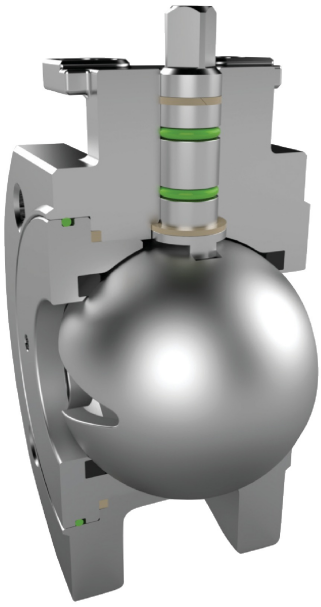

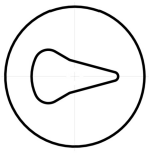

C1-V-BALL 30-60°

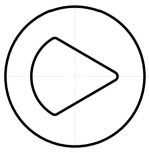

C2-V-BALL 60°

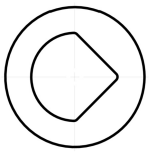

C3-V-BALL 90°

Temperature range: -20°C +180°C.

Vacuum: $10^{-3}$ torr.

| POSITION | PART NAME | MATERIAL | N.° PIECES |
|---|---|---|---|
| 1 | BODY | A351-CF8M | 1 |
| 2 | END CONNECTION | A479-TP316/A182-F316 | 1 |
| 3 | BALL | A351-CF8M | 1 |
| 4 | STEM | A479-TP316/17-4-PH | 1 |
| 5 | BALL SEAT | RPTFE | 2 |
| 6 | BODY SEAT | PTFE | 1 |
| 7 | STEM SEAT | PTFE | 1 |
| 8 | ANTIFRICTION RING | TFM-MPTFE | 1 |
| 9 | O-RING | FKM | 2 |
| 10 | O-RING | FKM | 1 |

| SIZE | DN | CODE | D | Y | Z | L | A | C | E | ØN | B | ØN1 | B1 | PN | KG |
|---|---|---|---|---|---|---|---|---|---|---|---|---|---|---|---|
| 1" | 25 | 72300406 | 110 | 85 | 4xM12 | 48 | 70 | 11 | 9 | 36-F03 | 5,5 | 50-F05 | 7 | 16 | 2,40 |
| 1"1/4 | 32 | 72300407 | 130 | 100 | 4xM16 | 54 | 82 | 10 | 9 | 36-F03 | 5,5 | 50-F05 | 7 | 16 | 3,50 |
| 1"1/2 | 40 | 72300408 | 140 | 110 | 4xM16 | 63,5 | 93 | 13 | 11 | 50-F05 | 6,5 | - | - | 16 | 4,50 |
| 2" | 50 | 72300410 | 155 | 125 | 4xM16 | 82 | 101,5 | 13,5 | 11 | 50-F05 | 6,5 | 70-F07 | 9 | 16 | 6,70 |
| 2"1/2 | 65 | 72300412 | 180 | 145 | 4xM16 | 103 | 128,5 | 18,5 | 14 | 70-F07 | 9 | - | - | 16 | 10,90 |
| 3" | 80 | 72300414 | 190 | 160 | 8xM16 | 122 | 138 | 18 | 14 | 70-F07 | 9 | - | - | 16 | 14,00 |
| 4" | 100 | 72300418 | 220 | 180 | 8xM16 | 152 | 153 | 18,5 | 17 | 70-F07 | 9 | - | - | 16 | 20,90 |

# Certifications

ATEX

SIL 3

F.E. TESTED ISO15848-1