BONOMI GROUP

VALPRES

WAFER PN16



724000

CARBON STEEL

Full bore flanged ball valve PN16, in blued carbon steel A352-LCB, with ISO 5211 pad and Antistatic Device.

V-Ball option

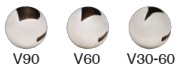

Technical specifications

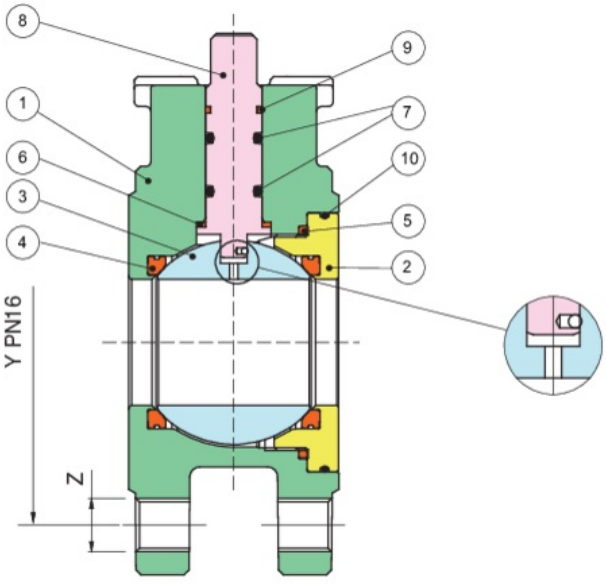

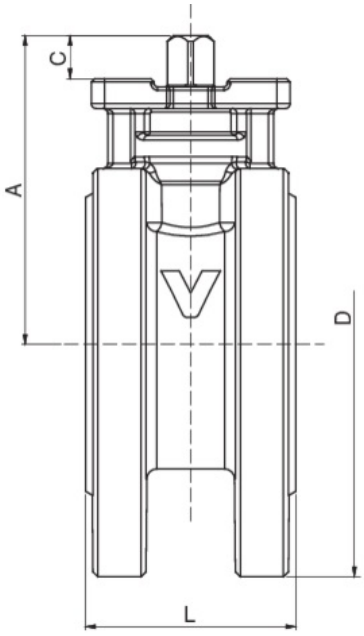

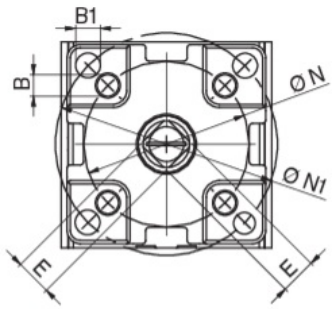

Temperature range: -20°C +180°C.

Vacuum: 10^{-3} torr.

POSITION	PART NAME	MATERIAL	N.° PIECES
1	BODY	A352-LCB	1
2	END CONNECTION	ASTM A105	1
3	BALL	A351-CF8/A479-TP304	1
4	BALL SEAT	TFM-MPTFE	2
5	BODY SEAT	PTFE	1
6	THRUST WASHER	TFM-MPTFE	1
7	O-RING	FKM	2
8	STEM	A479-TP316/17-4-PH	1
9	STEM SEAT	PTFE	1
10	O-RING	FKM	1

SIZE	DN	CODE	D	Y	Z	L	A	C	E	ØN	B	ØN1	B1	KV	PN	KG
1"	25	72400006	110	85	4XM12	48	70	11	9	36	5,5	50	7	64,5	16	2,40
1"1/4	32	72400007	130	100	4XM16	54	82	10	9	36	5,5	50	7	103,8	16	3,50
1"1/2	40	72400008	140	110	4XM16	63,5	93	13	11	50	6,5	-	-	174	16	4,50
2"	50	72400010	155	125	4XM16	82	101,5	13,5	11	50	6,5	70	9	301,3	16	6,70
2"1/2	65	72400012	180	145	4XM16	103	128,5	15,5	14	70	9	-	-	545,7	16	10,90
3"	80	72400014	190	160	8XM16	122	138	15	14	70	9	-	-	872,5	16	14,00
4"	100	72400018	220	180	8XM16	152	153	18,5	17	70	9	-	-	1363,3	16	20,90

Available versions: ANSI150M: 724100; ANSI150U: 724101.

Certifications

ATEX

SIL 3

F.E. TESTED ISO15848-1

T.A.LUFT

Spare Parts

- SEATS

Code	Material	Size
RI6216	PTFE	1"
RI6217	PTFE	1"1/4
RI6218	PTFE	1"1/2
RI6179	PTFE	2"
RI6180	PTFE	2"1/2
RI6181	PTFE	3"
RI6219	PTFE	4"

- BALL

Code	Material	Size
00306000038	AISI 304	25
00307000054	AISI 304	32
00308000029	AISI 304	40
00310000028	AISI 304	50
00312000013	AISI 304	65
00314000016	AISI 304	80
00318007002	AISI 304	100

● STEMS

Code	Material	Size
00406000054	17-4-PH	25
00407000040	17-4-PH	32
00408000055	17-4-PH	40
00408000055	17-4-PH	50
00414000025	17-4-PH	65
00414000025	17-4-PH	80
00418000047	17-4-PH	100