BONOMI GROUP

VALPRES

WAFER PN16 V-BALL



724005 C1-C2-C3

CARBON STEEL

Full bore flanged ball valve PN16, in blued carbon steel A352-LCB equipped with V-Ball for pressure and flow regulation with ISO 5211 pad and Antistatic Device.

V-Ball

V90 V60 V30-60

Technical specifications

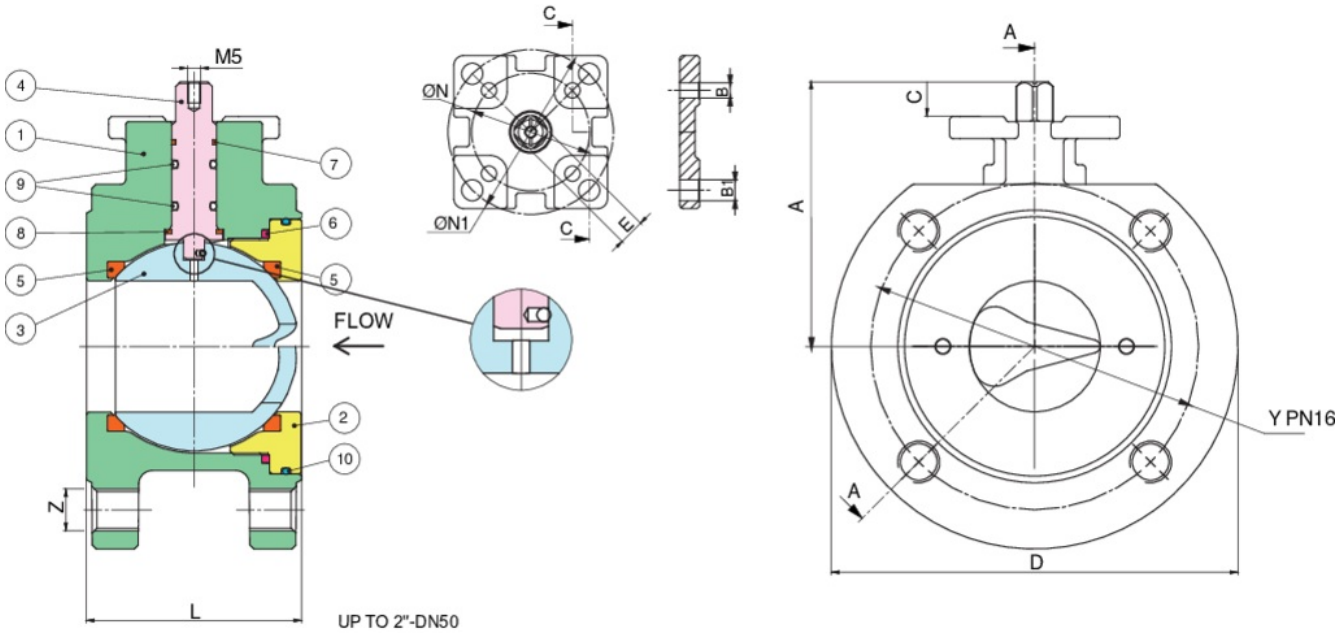

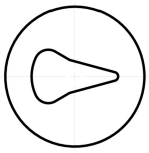

C1-V-BALL 30-60°

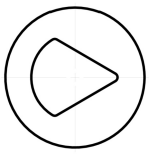

C2-V-BALL 60°

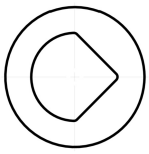

C3-V-BALL 90°

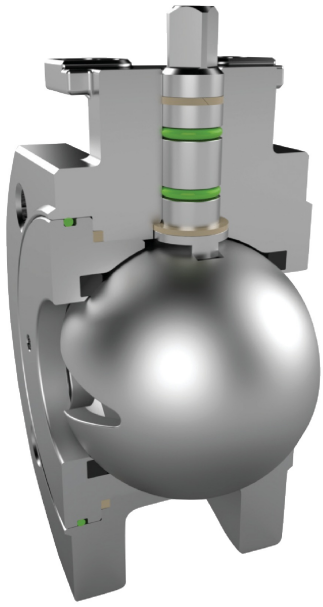

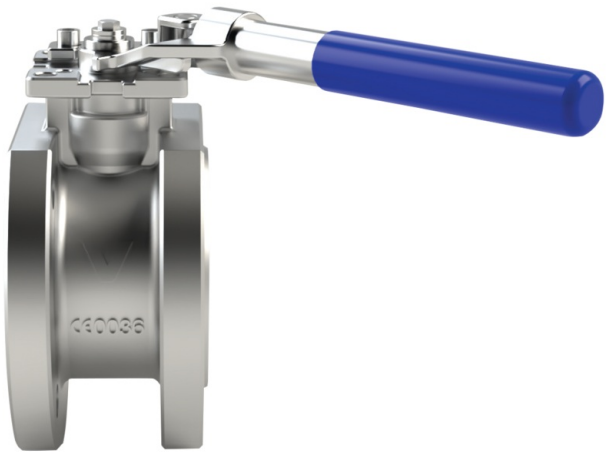

Temperature range: -20°C +180°C.

Vacuum: 10^{-3} torr.

POSITION	PART NAME	MATERIAL	N.° PIECES
1	BODY	A352-LCB	1
2	END CONNECTION	ASTM A105	1
3	BALL	A351-CF8M	1
4	STEM	A479-TP316/17-4-PH	1
5	BALL SEAT	RPTFE	2
6	BODY SEAT	PTFE	1
7	STEM SEAT	PTFE	1
8	ANTIFRICTION RING	TFM-MPTFE	1
9	O-RING	FKM	2
10	O-RING	FKM	1

SIZE	DN	CODE	D	Y	Z	L	A	C	E	ØN	B	ØN1	B1	PN	KG
1"	25	724005 C106- C206- C306	110	85	4xM12	48	70	11	9	36-F03	5,5	50-F05	7	16	2,40
1"1/4	32	724005 C107-C207-C307	130	100	4xM16	54	82	10	9	36-F03	5,5	50-F05	7	16	3,50
1"1/2	40	724005 C108-C208-C308	140	110	4xM16	63,5	93	13	11	50-F05	6,5	-	-	16	4,50
2"	50	724005 C110-C210-C310	155	125	4xM16	82	101,5	13,5	11	50-F05	6,5	70-F07	9	16	6,70
2"1/2	65	724005 C112-C212-C312	180	145	4xM16	103	128,5	18,5	14	70-F07	9	-	-	16	10,90
3"	80	724005 C114-C214-C314	190	160	8xM16	122	138	18	14	70-F07	9	-	-	16	14,00
4"	100	724005 C118-C218-C318	220	180	8xM16	152	153	18,5	17	70-F07	9	-	-	16	20,90

Certifications

ATEX

SIL 3