

720301

STAINLESS STEEL

Full bore flanged ball valve PN16 with Antistatic Device and Fire Safe certificate, metric thread stainless steel A351-CF8M. Suitable for steam.

FOR STEAM

V-Ball option

V90 V60 V30-60

Technical specifications

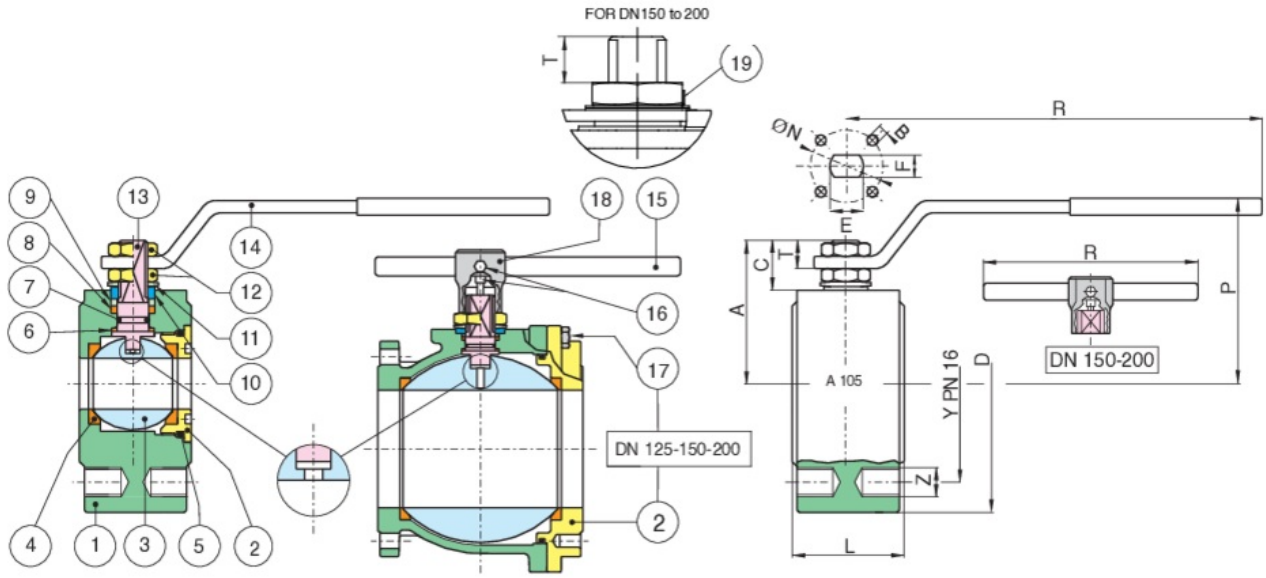

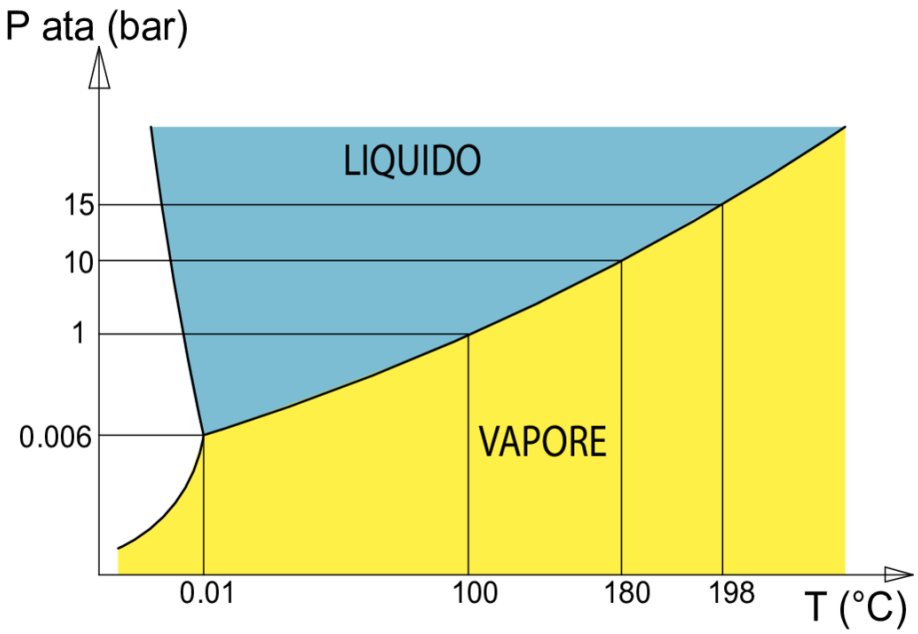

MAXIMUM WORKING PRESSURE 15 bar WITH STEAM.

POSITION	PART NAME	MATERIAL	N.° PIECES
1	BODY	A351-CF8M/A479-TP316	1
2	END CONNECTION	A351-CF8M/A479-TP316	1
3	BALL	A351-CF8M/A479-TP316	1
4	BALL SEAT	PTFE+CARBOGRAFITE	2
5	O-RING	FKM	1
6	THRUST WASHER	PTFE+CARBOGRAFITE	1
7	O-RING	FKM	1
8	STEM SEAT	PTFE+CARBOGRAFITE	1
9	PACKING GLAND	CARBON STEEL	1
10	END STOP	INOX AISI 430 (DN15-DN50) CARBON STEEL (DN65-DN100)	2-1
11	SPRING WASHER	CARBON STEEL	2
12	NUT	CARBON STEEL	2
13	STEM	A479-TP316/17-4-PH	1
14	HANDLE	CARBON STEEL	1
15	HANDLE DN150	CARBON STEEL	1
16	SCREW	CARBON STEEL	2
17	SCREW	CARBON STEEL	8-12
18	BODY HANDLE DN150-200	EN GJL 250	1
19	UNSCREWING GROWER	A182-F316	1

SIZE	DN	CODE	D	Y	Z	L	R	P	A	C	T	E	F	ØN	B	KV	PN	KG
1/2"	15	72030104	90	65	4xM12	35	131	65	47	15,5	9	10	7	32	4xM5	19,2	16	1,30
3/4"	20	72030105	100	75	4xM12	40	131	69	51,5	15,5	9	10	7	32	4xM5	35	16	1,90
1"	25	72030106	115	85	4xM12	46	174	80	61	17	11	12	8	42	4xM5	64,5	16	2,20
1"1/4	32	72030107	140	100	4xM16	54	174	84	64,5	15	11	12	8	42	4xM5	103,8	16	3,30
1"1/2	40	72030108	150	110	4xM16	63,5	250	102	78	24,5	13	16	10	50	4xM6	174	16	4,20
2"	50	72030110	165	125	4xM16	82	250	111	87	25	13	16	10	50	4xM6	301,3	16	6,10
2"1/2	65	72030112	185	145	4xM16	103	321	128	104,5	25	18	20	14	70	4xM8	545,7	16	10,00
3"	80	72030114	200	160	8xM16	122	321	138	115	28,5	18	20	14	70	4xM8	872,5	16	13,50
4"	100	72030118	220	180	8xM16	152	381	156	137	34,5	22	24	18	102	4xM10	1363,3	16	20,90
5"	125	72030119	250	210	8xM16	196	381	178	159	34	22	24	18	102	4xM10	2360,3	16	40,50
6"	150	72030120	285	240	8xM20	232	700	266	201,5	51,5	30	42	30	125	4xM12	3671,1	16	61,50

Certifications

TUV SIL 3

FIRESAFE ATEX BS6755-2

F.E. TESTED ISO15848-1

Spare Parts

HANDLES

Code	Material	Size
RI2018	A 37	15
RI2018	A 37	20
RI2019	A 37	25
RI2019	A 37	32
RI2020	A 37	40
RI2020	A 37	50
RI2016	A 37	65
RI2016	A 37	80
RI2017	A 37	100
RI2017	A 37	125
RI2021	A 37	150
RI2021	A 37	200

SEATS

Code	Material	Size
RI2397	PTFE CON ANIMA METALLICA - METAL CORE PTFE	15
RI2435	PTFE CON ANIMA METALLICA - METAL CORE PTFE	20
RI2460	PTFE CON ANIMA METALLICA - METAL CORE PTFE	25
RI2436	PTFE CON ANIMA METALLICA - METAL CORE PTFE	32
RI2437	PTFE CON ANIMA METALLICA - METAL CORE PTFE	40
RI2461	PTFE CON ANIMA METALLICA - METAL CORE PTFE	50
RI2462	PTFE CON ANIMA METALLICA - METAL CORE PTFE	65
RI2463	PTFE CON ANIMA METALLICA - METAL CORE PTFE	80
RI2464	PTFE CON ANIMA METALLICA - METAL CORE PTFE	100

BALL

Code	Material	Size
00304000037	AISI 316	15
00305000031	AISI 316	20
00306000031	AISI 316	25
00307000028	AISI 316	32
00308000026	AISI 316	40
00310000080	AISI 316	50
00312000009	AISI 316	65
00314000013	AISI 316	80
00318007006	AISI 316	100

STEMS

Code	Material	Size
00405000029	AISI 316	15
00405000029	AISI 316	20
00406000011	AISI 316	25
00406000011	AISI 316	32
00408000010	AISI 316	40
00408000010	AISI 316	50
00412000021	AISI 316	65
00412000021	AISI 316	80
00420000001	AISI 316	150
00420000001	AISI 316	200

● STEMS ANTISTATIC DEVICE

Code	Material	Size
00418000006	AISI 316	100
00418000006	AISI 316	125