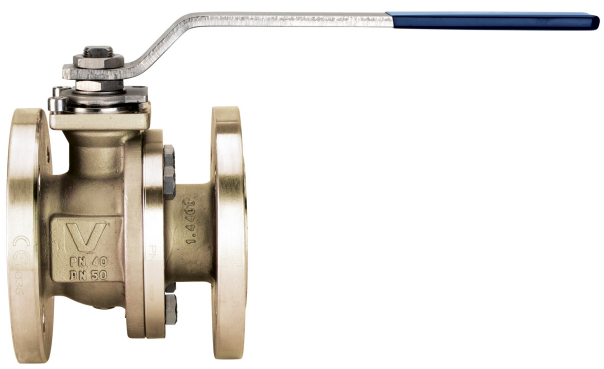

760041

CARBON STEEL

Flanged PN40 zinc-plated/painted (DN>100) carbon steel A352-LCB ball valve, full bore, EN 558 basic series 27, face to face dimension, Fire Safe, Antistatic Device.

V-Ball option

V90 V60 V30-60

Low temperature design -40°C

Technical specifications

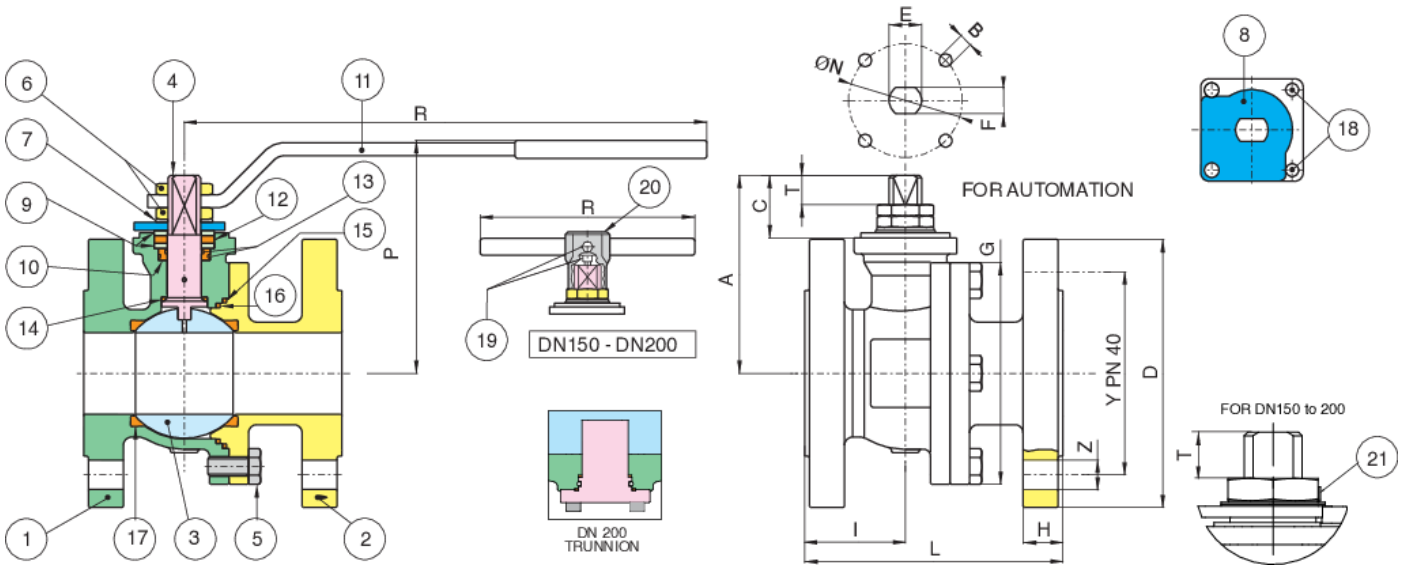

Temperature range: -20°C +160°C.

Vacuum: 10^{-3} torr.

POSITION	PART NAME	MATERIAL	N.° PIECES
1	BODY	A352-LCB	1
2	END CONNECTION	A352-LCB	1
3	BALL	A479-TP304/A351-CF8	1
4	STEM	A479-TP304/17-4-PH	1
5	SCREW	CARBON STEEL	4-8-12
6	NUT	STAINLESS STEEL	1-2
7	SPRING WASHER	CARBON STEEL	2
8	90° STOP	CARBON STEEL	1
9	PACKING GLAND	A182-F316	2
10	STEM SEAT	PTFE	1
11	HANDLE	CARBON STEEL	1
12	STEM SEAL	GRAPHOIL	1
13	O-RING	FKM	2
14	THRUST WASHER	PTFE	1
15	BODY SEAT	GRAPHOIL	1
16	BODY SEAT	PTFE	1
17	BALL SEAT	PTFE+FIBERGLASS	2
18	SCREW	CARBON STEEL	2
19	SCREW	CARBON STEEL	2
20	BODY HANDLE DN150-200	EN GJL 250	1
21	UNSCREWING GROWER	A182-F316	1

SIZE	DN	CODE	D	Y	Z	H	I	L	G	P	R	A	C	T	E	F	ØN	B	KV	PN	KG
1/2"	15	76004104	95	65	4xØ14	16	49	115	71	88	131	52	19	8	M10	7	42-F04	M5	19,2	40	2,50
3/4"	20	76004105	105	75	4xØ14	18	51	120	73,5	93	131	56	19	8	M10	7	42-F04	M5	35	40	3,20
1"	25	76004106	115	85	4xØ14	18	54	125	90,5	89	174	72,5	27,5	13	M12	8	50-F05	M6	64,5	40	4,50
1"1/4	32	76004107	140	100	4xØ18	18	55	130	97	93	174	76	27,5	13	M12	8	50-F05	M6	103,8	40	5,80
1"1/2	40	76004108	150	110	4xØ18	18	51,5	140	114	133	250	107	30	10	M16	10	50-F05	M6	174	40	8,10
2"	50	76004110	165	125	4xØ18	20	57,5	150	136,5	144	321	122	38,5	18	M20	14	70-F07	M8	301,3	40	11,40
2"1/2	65	76004112	185	145	8xØ18	22	61	170	167,6	154	321	133	39,5	18	M20	14	70-F07	M8	545,7	40	15,30
3"	80	76004114	200	160	8xØ18	24	75,5	180	178,6	173	381	151	43	18	M24	18	102-F10	M10	872,5	40	21,60
4"	100	76004118	235	190	8xØ22	24	80	190	219	187	381	165	43	18	M24	18	102-F10	M10	1363,3	40	31,20
6"	150	76004120	300	250	8xØ25	28	163	350	306	305	700	245	68	41	M42	30	125-F12	M12	3671,1	40	82,70
8"*	200	76004121	375	320	12xØ29	34	201	400	410	348	700	290	68	41	M42	30	125-F12	M12	6816,6	40	143,00

*TRUNNION Δp=25 bar

Certifications

TUV SIL 3

FIRE-SAFE Acc. EN ISO 10497/API 607

F.E. TESTED ISO15848-1

Spare Parts

HANDLES

Code	Material	Size
RI2018	A 37	15
RI2018	A 37	20
RI2019	A 37	25
RI2019	A 37	32
RI2020	A 37	40
RI2016	A 37	50
RI2016	A 37	65
RI2017	A 37	80
RI2017	A 37	100
RI2017	A 37	125
RI2021	A 37	150
RI2021	A 37	200

SEATS

Code	Material	Size
RI2360	PTFE CARICATO VETRO - GLASS FILLED PTFE	15
RI2361	PTFE CARICATO VETRO - GLASS FILLED PTFE	20
RI2362	PTFE CARICATO VETRO - GLASS FILLED PTFE	25
RI2363	PTFE CARICATO VETRO - GLASS FILLED PTFE	32
RI2364	PTFE CARICATO VETRO - GLASS FILLED PTFE	40
RI2365	PTFE CARICATO VETRO - GLASS FILLED PTFE	50
RI2647	PTFE CARICATO VETRO - GLASS FILLED PTFE	50 SPLIT WAFER
RI2366	PTFE CARICATO VETRO - GLASS FILLED PTFE, PTFE VETRO - GLASS FILLED PTFE	65
RI2367	PTFE CARICATO VETRO - GLASS FILLED PTFE	80
RI2368	PTFE CARICATO VETRO - GLASS FILLED PTFE, PTFE VETRO - GLASS FILLED PTFE	100DIN
RI2369	PTFE CARICATO VETRO - GLASS FILLED PTFE, PTFE VETRO - GLASS FILLED PTFE	100ANSI
RI2370	PTFE CARICATO VETRO - GLASS FILLED PTFE	125
RI2371	PTFE CARICATO VETRO - GLASS FILLED PTFE	150
RI2543	PTFE CARICATO VETRO - GLASS FILLED PTFE	200

BALL

Code	Material	Size
00304000046	AISI 304	15
00305000075	AISI 304	20
00306000038	AISI 304	25
00307000054	AISI 304	32
00308000029	AISI 304	40
00310000028	AISI 304	50
00312000013	AISI 304	65
00314000016	AISI 304	80
00318007004	AISI 304	100DIN
00318007002	AISI 304	100ANSI
00319007006	AISI 304	125
00320007001	AISI 304	150
00321000028	AISI 304	200

STEMS ANTISTATIC DEVICE

Code	Material	Size
00404000033	AISI 316	15
00404000033	AISI 316	20
00406000020	AISI 316	25
00406000020	AISI 316	32
00412000014	AISI 316	65

STEMS

Code	Material	Size
00408000022	AISI 316	40
00410000023	AISI 316	50
00414000006	AISI 304	80
00414000006	AISI 304	100
00414000006	AISI 304	125
00420000008*	AISI 304	150
00420000008*	AISI 304	200
00477000005	17-4-PH	250
00477000005	17-4-PH	300