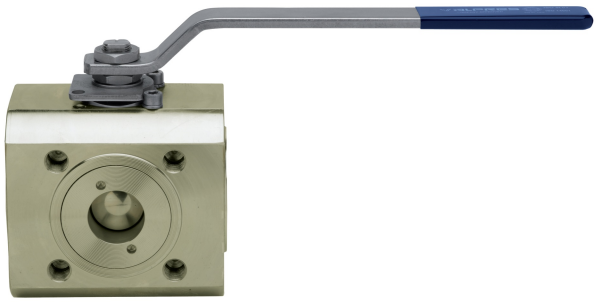

776601(L) - 776600(T)

CARBON STEEL

Full bore three way flanged PN16 diverter ball valve, zinc-plated A105 carbon steel, L multi port ball, with 4 seats.

option V-PACK

Technical specifications

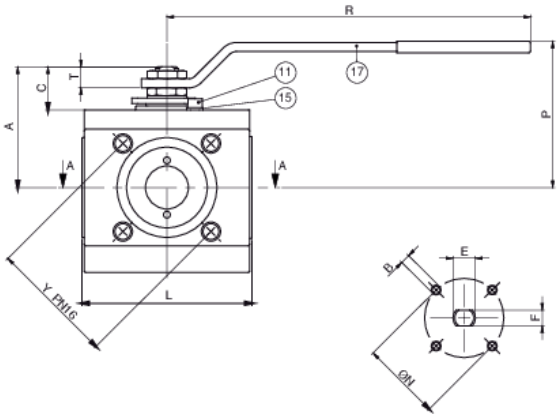

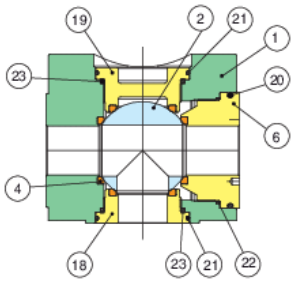

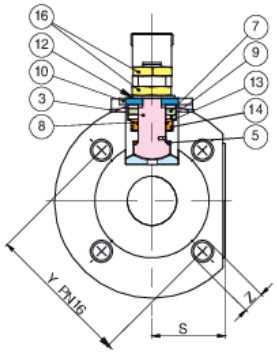

Carbon steel temperature range: -10°C +160°C.

Vacuum: 10^{-3} torr.

The DN80 and DN100 versions differ from the drawing shown.

POSITION	PART NAME	MATERIAL	N.° PIECES
1	BODY	ASTM A105	1
2	BALL	A479-TP316/A351-CF8M	1
3	STEM	A479-TP304	1
4	BALL SEAT	PTFE	4
5	THRUST WASHER	PTFE	1
6	END CONNECTION	ASTM A105	1
7	STEM SEAT	GRAPHOIL	1
8	STEM SEAT	PTFE	1
9	PACKING GLAND	CARBON STEEL	2
10	END STOP	CARBON STEEL	1
11	SCREW	CARBON STEEL	2
12	SPRING WASHER	CARBON STEEL	2
13	O-RING	FKM	1
14	O-RING	FKM	1
15	WASHER	STAINLESS STEEL	2
16	NUT	CARBON STEEL	2
17	HANDLE	CARBON STEEL	1
18	BODY SEAT	PTFE	1
19	STEM RETAINING NUT	ASTM A105	1
20	STEM RETAINING NUT	ASTM A105	1
21	O-RING	FKM	1
22	BODY SEAT	PTFE	2
23	O-RING	FKM	2

SIZE	DN	CODE	Y	Z	L	S	R	P	A	C	T	E	F	ØN	B	KV(L)	PN	KG
1/2"	15	77660104 - 77660004	65	4xM12	99	35	131,5	73	55	20	10	M10	7	42	4xM5	7,6	16	3,70
3/4"	20	77660105 - 77660005	75	4xM12	108	40	174	90	72	28	13	M12	8	50	4xM6	12,2	16	5,50
1"	25	77660106- 77660006	85	4xM12	115	41,5	174	95	76	27	12	M12	8	50	4xM6	21,1	16	7,00
1"1/4	32	77660107 - 77660007	100	4xM16	140	52,5	250	116	92	31	13	M16	10	50	4xM6	34,6	16	12,50
1"1/2	40	77660108 - 77660008	110	4xM16	150	56,5	321	129	107	38	18,5	M20	14	70	4xM8	48,8	16	16,50
2"	50	77660110 - 77660010	125	4xM16	167	62	321	137	115	38	18,5	M20	14	70	4xM8	85,1	16	22,50
2"1/2	65	77660112 - 77660012	145	4xM16	185	85	321	150	131	41	22,5	M20	14	70	4xM8	138,4	16	37,00
3"	80	77660114 - 77660014	160	8xM16	216	127	381	171	147	40	18	M24	18	102	4xM10	220,1	16	60,00
4"	100	77660118 - 77660018	180	8xM16	244	150	381	192	169	39	18	M24	18	102	4xM10	381,1	16	95,00

Certifications

TUV

ATEX

Spare Parts

- HANDLES

Code	Material	Size
RI2018	A 37	15
RI2019	A 37	20
RI2020	A 37	32
RI2016	A 37	40
RI2016	A 37	50
RI2016	A 37	65
RI2017	A 37	80
RI2017	A 37	100

SEATS

Code	Material	Size
RI2652	PTFE	15
RI2653	PTFE	20
RI2637	PTFE	25
RI2654	PTFE	32
RI2638	PTFE	40
RI2639	PTFE	50
RI2640	PTFE	65
RI2641	PTFE	80
RI2642	PTFE	100

BALL

Code	Material	Size
00304000067	AISI 316	15
00305000062	AISI 316	20
00306000065	AISI 316	25
00307000066	AISI 316	32
00308000063	AISI 316	40
00310000087	AISI 316	50
00312000029	AISI 316	65
00314000039	AISI 316	80
00318000008	AISI 316	100
00304000066	AISI 316	15
00305000061	AISI 316	20
00306000062	AISI 316	25
00307000058	AISI 316	32
00308000064	AISI 316	40
00310000085	AISI 316	50
00312000031	AISI 316	65
00314000010	AISI 316	80
00318000025	AISI 316	100