

700006

Full bore polished stainless steel AISI 316-CF8M ball valve, F/F threading.

Butterfly handle in stainless steel 1/8" - 1/4" - 3/8" - 1/2".

V-Ball option



Technical specifications

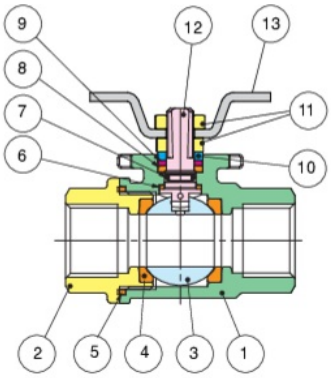

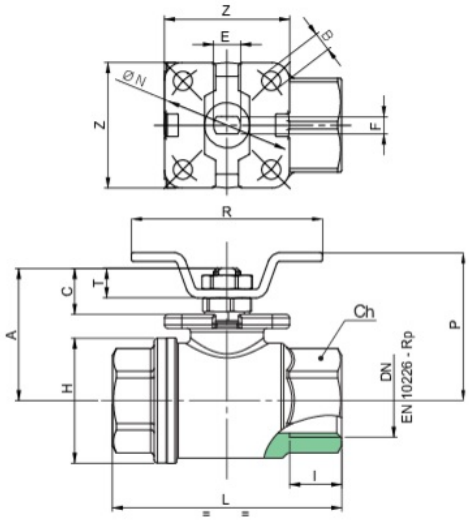

POSITION	PART NAME	MATERIAL	N.° PIECES
1	BODY	A351-CF8M	1
2	END CONNECTION	A351-CF8M	1
3	BALL	A479-TP316/A351-CF8M	1
4	BALL SEAT	PTFE	2
5	BODY SEAT	PTFE	1
6	THRUST WASHER	TFM	1
7	O-RING	FKM (Viton)	1
8	STEM SEAT	PTFE	1
9	PACKING GLAND	A479-TP316	1
10	90° STOP	AISI 316	1
11	NUT	A2-70	2
12	STEM	A479-TP316	1
13	HANDLE	INOX AISI 316	1

SIZE	DN	CODE	BOX	I	L	H	CH	R	P	A	C	T	E	F	ØN ISO 5211	B	Z	KV	PN	KG
1/8"	6	70000601	15	7,4	55	30	ES.22	55	41	35	13,5	9	8	5	36	5,5	36	5	140	0,28
1/4"	8	70000602	15	11	55	30	ES.22	55	41	35	13,5	9	8	5	-	-	-	5,5	140	0,26
3/8"	10	70000603	15	11,4	55	30	ES.22	55	41	35	13,5	9	8	5	-	-	-	8,5	140	0,25
1/2"	15	70000604	10	15	66	36	ES.27	55	44	38	13,5	9	8	5	-	-	-	19,2	140	0,34

Certifications

TUV

ATEX FIRE-SAFE (On request)