BONOMI GROUP

VALPRES

# WAFER PN16



## 720276

Full bore flanged ball valve PN16, metric thread stainless steel A351-CF8 and A351-CF8M.

A182-F316/A351-CF8M Jackted flange.

**V-Ball option**

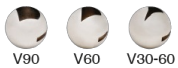


## Technical specifications

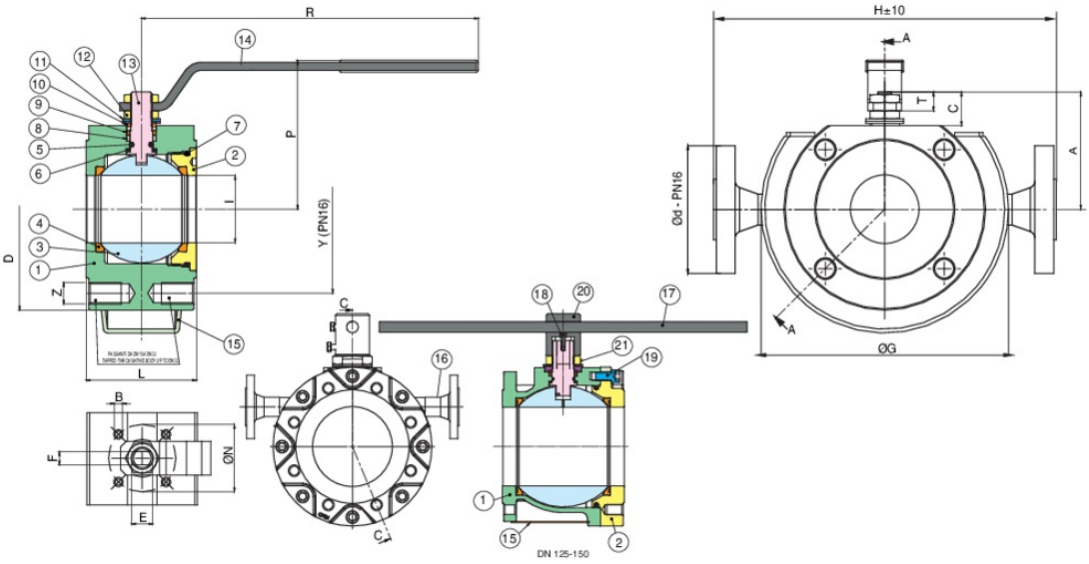

| POSITION | PART NAME | MATERIAL | N.° PIECES |
|---|---|---|---|
| 1 | BODY | A351-CF8M-A182-F316-A479-Tp316 | 1 |
| 2 | END CONNECTION | A351-CF8M-A182-F316-A479-Tp316 | 1 |
| 3 | BALL | A351-CF8M | 1 |
| 4 | BALL SEAT | PTFE | 2 |
| 5 | O-RING | FKM (Viton) | 1 |
| 6 | ANTIFRICTION RING | TFM | 1 |
| 7 | O-RING | FKM (Viton) | 1 |
| 8 | STEM SEAT | PTFE | 1 |
| 9 | PACKING GLAND | A37+Z/P | 1 |
| 10 | 90° STOP | AISI 430 (DN15-DN50) A37+Z-P (DN65-DN200) | 2 |
| 11 | SPRING WASHER | 51CrV4+Z/P | 2 |
| 12 | NUT | 6S+Z/P | 2 |
| 13 | STEM | A479-TP316 | 1 |
| 14 | HANDLE | A37+Z/P | 1 |
| 15 | HEATING JACKET | AISI 316 | 1 |
| 16 | END CONNECTION | A479-TP316/316L | 2 |
| 17 | HANDLE DN150 | S275J2H | 1 |
| 18 | SCREW DN150 | 8.8+Z/P | 2 |
| 19 | SCREW | 8.8+Z/P | 8 |
| 20 | BODY HANDLE DN150 | EN GJL 250 | 1 |
| 21 | UNSCREWING GROWER DN150 | AISI 316 | 1 |

| SIZE | DN | CODE | D | Y | Z | L | R | P | A | C | T | E | F | ØN | B | KV | PN | KG | I | ØG | H | ØD |
|---|---|---|---|---|---|---|---|---|---|---|---|---|---|---|---|---|---|---|---|---|---|---|
| 1/2" | 15 | 72027604 | 90 | 65 | 4xM12 | 35 | 131 | 65 | 47 | 15,5 | 9 | 10 | 7 | 32 | 4xM5 | 19,2 | 16 | 3,3 | 15 | 120 | 200 | Ø95 1/2" - PN16 |
| 3/4" | 20 | 72027605 | 100 | 75 | 4xM12 | 40 | 131 | 69 | 51,5 | 15,5 | 9 | 10 | 7 | 32 | 4xM5 | 35 | 16 | 3,7 | 20 | 130 | 210 | Ø95 1/2" - PN16 |
| 1" | 25 | 72027606 | 115 | 85 | 4xM12 | 46 | 174 | 80 | 61 | 17 | 11 | 12 | 8 | 42 | 4xM5 | 64,5 | 16 | 4,6 | 25 | 140 | 210 | Ø95 1/2" - PN16 |
| 1"1/4 | 32 | 72027607 | 140 | 100 | 4xM16 | 54 | 174 | 84 | 64,5 | 16,5 | 11 | 12 | 8 | 42 | 4xM5 | 103,8 | 16 | 6,2 | 32 | 160 | 230 | Ø95 1/2" - PN16 |
| 1"1/2 | 40 | 72027608 | 150 | 110 | 4xM16 | 63,5 | 250 | 102 | 78 | 24,5 | 13 | 16 | 10 | 50 | 4xM6 | 174 | 16 | 8,00 | 38 | 170 | 240 | Ø95 1/2" - PN16 |
| 2" | 50 | 72027610 | 165 | 125 | 4xM16 | 82 | 250 | 111 | 87 | 25 | 13 | 16 | 10 | 50 | 4xM6 | 301,3 | 16 | 11,4 | 50,2 | 186 | 255 | Ø95 1/2" - PN16 |
| 2"1/2 | 65 | 72027612 | 185 | 145 | 4xM16 | 103 | 321 | 128 | 104,5 | 25 | 18 | 20 | 14 | 70 | 4xM8 | 545,7 | 16 | 12,4 | 64 | 190 | 260 | Ø95 1/2" - PN16 |
| 3" | 80 | 72027614 | 200 | 160 | 8xM16 | 122 | 321 | 138 | 115 | 28,5 | 18 | 20 | 14 | 70 | 4xM8 | 872,5 | 16 | 18,1 | 76 | 205 | 275 | Ø95 1/2" - PN16 |
| 4" | 100 | 72027618 | 220 | 180 | 8xM16 | 152 | 381 | 156 | 137 | 34,5 | 22 | 24 | 18 | 102 | 4xM10 | 1363,3 | 16 | 27,6 | 95 | 225 | 300 | Ø115 1" - PN16 |
| 5" | 125 | 72027619 | 250 | 210 | 8xM16 | 196 | 381 | 178 | 159 | 34 | 22 | 24 | 18 | 102 | 4xM10 | 2360,3 | 16 | 41,5 | 125 | 255 | 380 | Ø115 1" - PN16 |
| 6" | 150 | 72027620 | 285 | 240 | 8xM20 | 232 | 700 | 266 | 201,5 | 51,5 | 30 | 42 | 30 | 125 | 4xM12 | 3671,1 | 16 | 90,3 | 150 | 290 | 415 | Ø115 1" - PN16 |

# Certifications

ADR BS 14432

F.E. TESTED ISO15848-1

TUV

SIL 3

ATEX FIRE-SAFE (On request)