BONOMI GROUP

VALPRES

WAFER PN16



720225

Full bore flanged ball valve PN16, metric thread stainless steel A351-CF8 and A351-CF8M.

A182-F316/A351-CF8M Jackted end connection.

V-Ball option

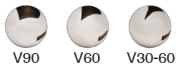

Technical specifications

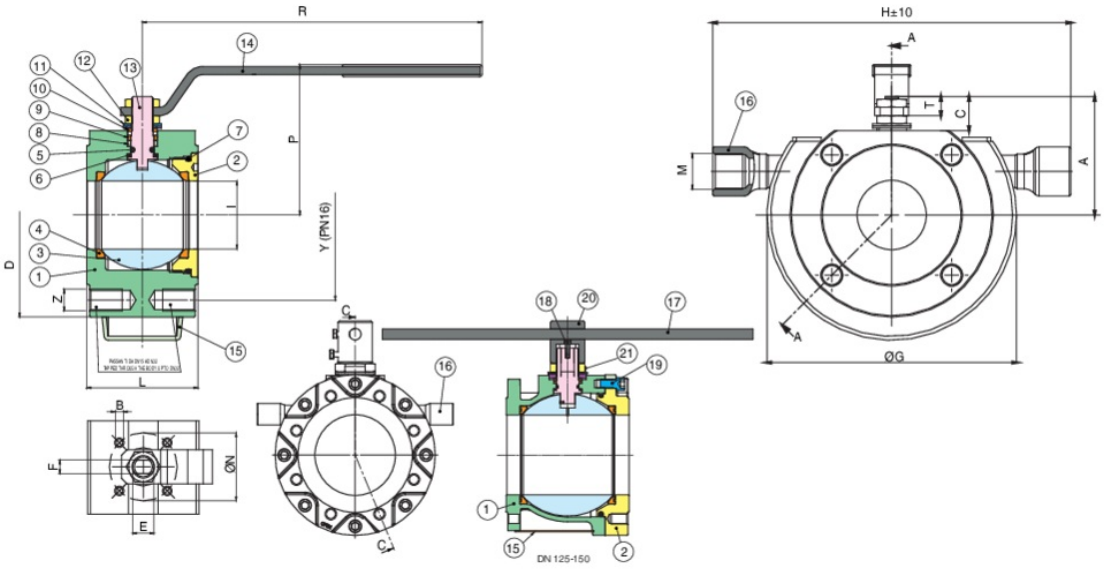

POSITION	PART NAME	MATERIAL	N.° PIECES
1	BODY	A351-CF8M-A182-F316-A479-Tp316	1
2	END CONNECTION	A351-CF8M-A182-F316-A479-Tp316	1
3	BALL	A351-CF8M	1
4	BALL SEAT	PTFE	2
5	O-RING	FKM (Viton)	1
6	ANTIFRICTION RING	TFM	1
7	O-RING	FKM (Viton)	1
8	STEM SEAT	PTFE	1
9	PACKING GLAND	A37+Z/P	1
10	90° STOP	AISI 430 (DN15-DN50) A37+Z-P (DN65-DN200)	2
11	SPRING WASHER	51CrV4+Z/P	2
12	NUT	6S+Z/P	2
13	STEM	A479-TP316	1
14	HANDLE	A37+Z/P	1
15	HEATING JACKET	AISI 316	1
16	END CONNECTION	A351-CF8	2
17	HANDLE DN150	S275J2H	1
18	SCREW DN150	8.8+Z/P	2
19	SCREW	8.8+Z/P	8
20	BODY HANDLE DN150	EN GJL 250	1
21	UNSCREWING GROWER DN150	AISI 316	1

SIZE	DN	CODE	D	Y	Z	L	R	P	A	C	T	E	F	ØN	B	KV	PN	KG	I	ØG	H	M
1/2"	15	72022504	90	65	4xM12	35	131	65	47	15,5	9	10	7	32	4xM5	19,2	16	1,95	15	120	225	G3/4" ISO228
3/4"	20	72022505	100	75	4xM12	40	131	69	51,5	15,5	9	10	7	32	4xM5	35	16	2,55	20	120	235	G3/4" ISO228
1"	25	72022506	115	85	4xM12	46	174	80	61	17	11	12	8	42	4xM5	64,5	16	3,45	25	140	225	G3/4" ISO228
1"1/4	32	72022507	140	100	4xM16	54	174	84	65,5	15	11	12	8	42	4xM5	103,8	16	5,5	32	160	240	G3/4" ISO228
1"1/2	40	72022508	150	110	4xM16	63,5	250	102	78	24,5	13	16	10	50	4xM6	174	16	7,25	38	170	250	G3/4" ISO228
2"	50	72022510	165	125	4xM16	82	250	111	87	25	13	16	10	50	4xM6	301,3	16	10,2	50,2	186	260	G3/4" ISO228
2"1/2	65	72022512	185	145	4xM16	103	321	128	104,5	25	18	20	14	70	4xM8	545,7	16	12,95	64	190	270	G3/4" ISO228
3"	80	72022514	200	160	8xM16	122	321	138	115	28,5	18	20	14	70	4xM8	872,5	16	16,7	76	205	270	G3/4" ISO228
4"	100	72022518	220	180	8xM16	152	381	156	137	34,5	22	24	18	102	4xM10	1363,3	16	25,55	95	225	270	G1" ISO228
5"	125	72022519	250	210	8xM16	196	381	178	159	34	22	24	18	102	4xM10	2360,3	16	68,2	125	255	332	G1" ISO228
6"	150	72022520	285	240	8xM20	232	700	266	201,5	51,5	30	42	30	125	4xM12	3671,1	16	68,2	150	290	370	G1" ISO228

Certifications

ADR BS 14432

F.E. TESTED ISO15848-1

TUV

SIL 3

ATEX FIRE-SAFE (On request)