INTER-GAS

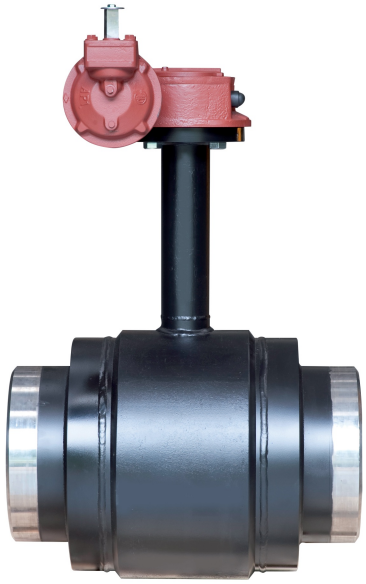

706800GB

Underground fully welded painted ball valve in carbon steel ASTM A105, trunnion ball, full bore, butt weld end connections, realized in accordance to UNI 9734 and EN 13774, complete with external extended stem and 90° manual operation gear.

Technical specifications

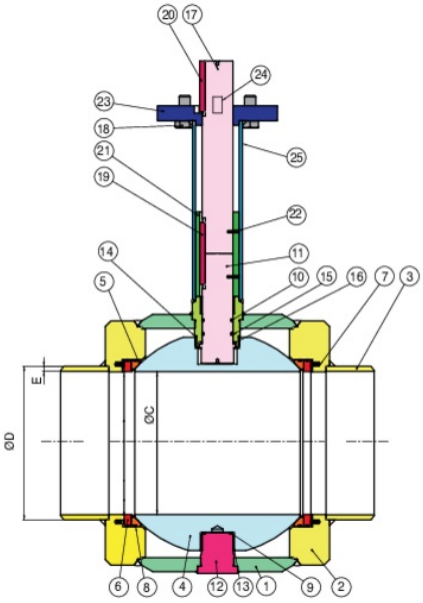

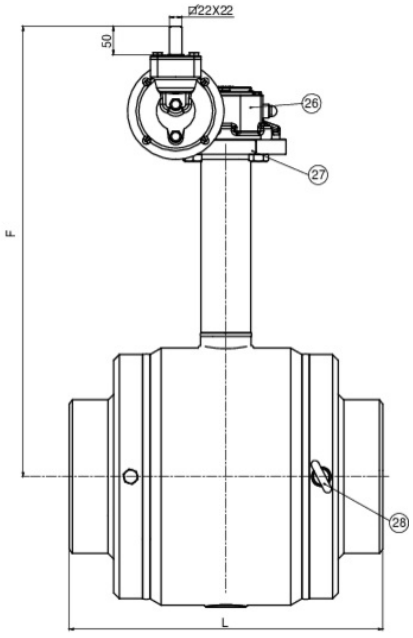

Temperature range: -10°C +60°C.

POSITION	PART NAME	MATERIAL	N.° PIECES
1	BODY	EN10210-1 S355J2H	1
2	END CONNECTION	ASTM A105	2
3	END CONNECTION	ASTM A106 GR B	2
4	BALL	A350-LF2+ENP 30µm	1
5	BALL SEAT	PTFE+23% CARBONE+2% GRAFITE	2
6	SEAT RING	EN10210-1 S355J2H	2
7	SPRING	AISI 302	32
8	O-RING	NBR	4
9	THRUST WASHER	PTFE	1
10	O-RING	FKM	2
11	STEM	A479-TP410	1
12	LOWER TRUNNION	ASTM A105	1
13	PACKING GLAND	CARBON STEEL	2
14	PACKING GLAND	CARBON STEEL	1
15	UPPER TRUNNION	ASTM A105	1
16	STEM SEAT	PTFE+23% CARBONE+2% GRAFITE	1
17	EXTENSION STEM	AISI 1040	1
18	SCREW	CARBON STEEL	4
19	FORELOCK	AISI4140	1
20	FORELOCK	AISI4140	1
21	PACKING GLAND	ASTM A105	1
22	STRAIGHT PIN	CARBON STEEL	1
23	CAP	ASTM A105	1
24	STRAIGHT PIN	A564-TP630 H1150D (17-4-PH)	2
25	EXTERNAL STEM EXTENSION	ASTM A106 GR B	1
26	MANUAL GEAR	ENGJS 400	1
27	LABEL	A479-TP304	1
28	LIFTING EYE BOLTS	CARBON STEEL	2

SIZE	DN	CODE	L	C	D	E	F	PN	KG
10"	250	70680077GB	559	254	273	9,27	800	16	352,00
12"	300	70680078GB	635	305	323,8	10,3	800	16	535,00
14"	350	70680097GB	762	337	-	-	-	20-ANSI150	810,00
20"	500	70680099GB	991	489	-	-	-	20-ANSI150	1,950.00

Epoxy painting 100 micron thick.