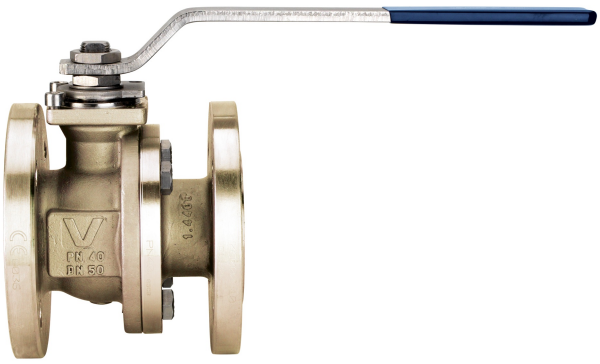

# 760008

Flanged PN16 zinc-plated/painted (DN>100) carbon steel A216-WCB ball valve, full bore, EN 558 basic series 27 face to face dimension, Fire Safe, Antistatic Device.

A216-WCB, seats PTFE+fiberglass.

**V-Ball option**

V90 V60 V30-60

Low temperature design -40°C

## Technical specifications

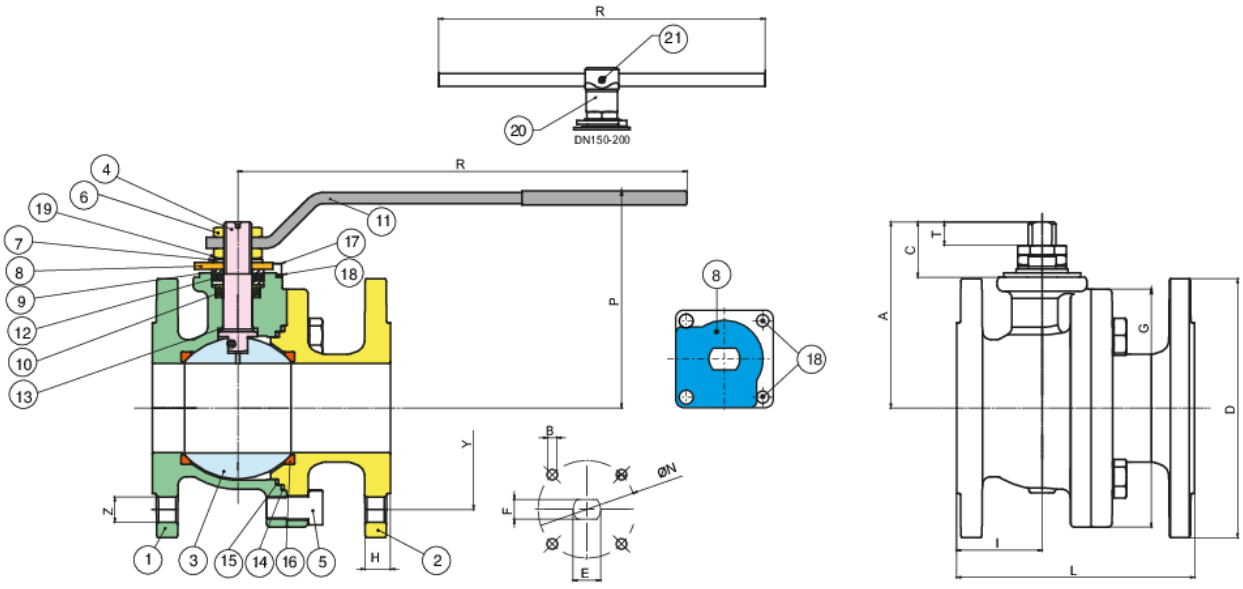

| POSITION | PART NAME | MATERIAL | N.° PIECES |
|---|---|---|---|
| 1 | BODY | A352-LCB | 1 |
| 2 | END CONNECTION | A352-LCB | 1 |
| 3 | BALL | A351-CF8 | 1 |
| 4 | STEM | A479-TP304 | 1 |
| 5 | SCREW | 8.8+Z/P | 4-8-12 |
| 6 | NUT | 6S+Z/P | 1-2 |
| 7 | SPRING WASHER | 51CrV4 | 2 |
| 8 | 90° STOP | A37+Z/P | 1 |
| 9 | PACKING GLAND | AISI 316 | 2 |
| 10 | STEM SEAT | PTFE | 1 |
| 11 | HANDLE | A37+Z/P | 1 |
| 12 | STEM SEAL | GRAPHOIL | 1 |
| 13 | O-RING | FKM | 2 |
| 14 | THRUST WASHER | TFM | 1 |
| 15 | BODY SEAT | GRAPHOIL | 1 |
| 16 | BODY SEAT | PTFE | 1 |
| 17 | BALL SEAT | PTFE CARICATO VETRO - GLASS FILLED PTFE | 2 |
| 18 | SCREW | A2-70 | 2 |
| 19 | WASHER | AISI 304 | 2 |
| 20 | BODY HANDLE | EN GJL 250 | 1 |
| 21 | SCREW | 8.8+Z/P | 2 |

| SIZE | DN | CODE | D | Y | Z | H | I | L | G | P | R | A | C | T | E | F | ØN | B | KV | PN | KG |
|---|---|---|---|---|---|---|---|---|---|---|---|---|---|---|---|---|---|---|---|---|---|
| 1/2" | 15 | 76000804 | 95 | 65 | 4xØ14 | 16 | 49 | 115 | 71 | 88 | 131 | 52 | 19 | 8 | M10 | 7 | 42-F04 | M5 | 19,2 | 40 | 2,50 |
| 3/4" | 20 | 76000805 | 105 | 75 | 4xØ14 | 18 | 51 | 120 | 73,5 | 93 | 131 | 56 | 19 | 8 | M10 | 7 | 42-F04 | M5 | 35 | 40 | 3,20 |
| 1" | 25 | 76000806 | 115 | 85 | 4xØ14 | 18 | 54 | 125 | 90,5 | 89 | 174 | 72,5 | 27,5 | 13 | M12 | 8 | 50-F05 | M6 | 64,5 | 40 | 4,50 |
| 1"1/4 | 32 | 76000807 | 140 | 100 | 4xØ18 | 18 | 55 | 130 | 97 | 93 | 174 | 76 | 27,5 | 13 | M12 | 8 | 50-F05 | M6 | 103,8 | 40 | 5,80 |
| 1"1/2 | 40 | 76000808 | 150 | 110 | 4xØ18 | 18 | 51,5 | 140 | 114 | 133 | 250 | 107 | 30 | 10 | M16 | 10 | 50-F05 | M6 | 174 | 40 | 8,10 |
| 2" | 50 | 76000810 | 165 | 125 | 4xØ18 | 20 | 57,5 | 150 | 136,5 | 144 | 321 | 122 | 38,5 | 18 | M20 | 14 | 70-F07 | M8 | 301,3 | 40 | 11,40 |
| 2"1/2 | 65 | 76000812 | 185 | 145 | 4xØ18 | 18 | 61 | 170 | 167,6 | 154 | 321 | 133 | 39,5 | 18 | M20 | 14 | 70-F07 | M8 | 545,7 | 16 | 15,40 |
| 3" | 80 | 76000814 | 200 | 160 | 8xØ18 | 20 | 75,5 | 180 | 178,6 | 173 | 381 | 151 | 43 | 18 | M24 | 18 | 102-F10 | M10 | 872,5 | 16 | 20,50 |
| 4" | 100 | 76000818 | 220 | 180 | 8xØ18 | 20 | 80 | 190 | 208,6 | 187 | 381 | 165 | 43 | 18 | M24 | 18 | 102-F10 | M10 | 1363,3 | 16 | 26,80 |
| 5" | 125 | 76000819 | 250 | 210 | 8xØ18 | 22 | 149 | 325 | 273 | 209 | 381 | 187 | 43 | 18 | M24 | 18 | 102-F10 | M10 | 2360,3 | 16 | 50,20 |
| 6" | 150 | 76000820 | 285 | 240 | 8xØ22 | 22 | 157 | 350 | 311 | 305 | 700 | 245 | 68 | 41 | M42 | 30 | 125-F12 | M12 | 3671,1 | 16 | 75,70 |
| 8" | 200 | 76000821 | 340 | 295 | 12xØ22 | 24 | 190 | 400 | 402 | 348 | 700 | 288 | 68 | 41 | M42 | 30 | 125-F12 | M12 | 6816,6 | 16 | 135,5 |

# Certifications

ADR BS 14432

TUV SIL 3

FIRE-SAFE Acc. EN ISO 10497/API 607

F.E. TESTED ISO15848-1