722V00



Full bore flanged ball valve PN16/40 blued carbon steel A105/LF2, EN 558 basic series 100, metric thread, V-Pack stem seal, Fire safe, Antistatic Device.

V-Ball option



V-PACK

Low temperature design
-40°C ON DEMAND

Technical specifications

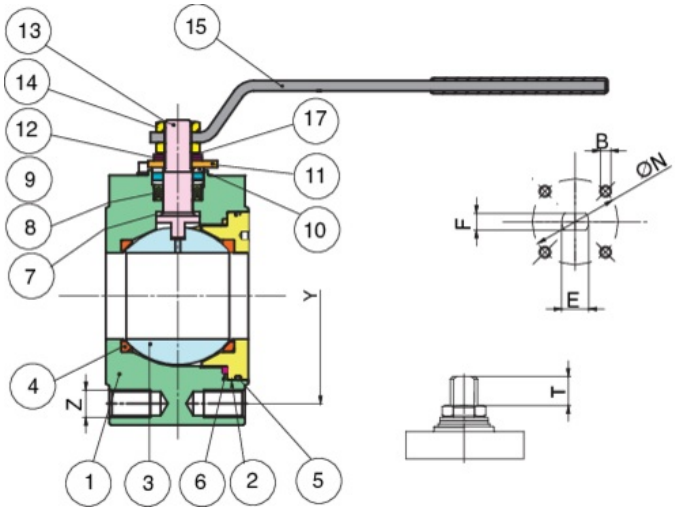

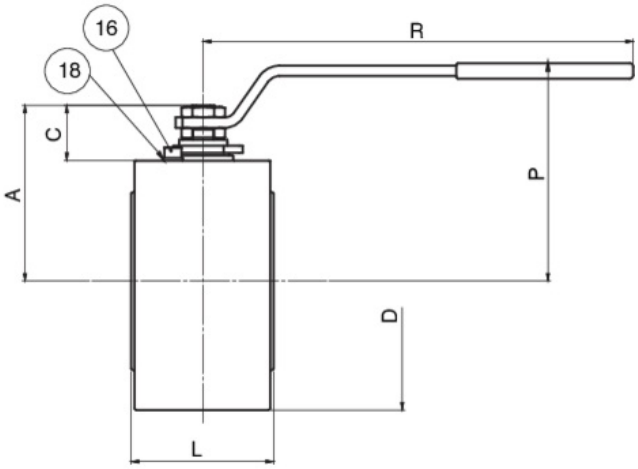

Temperature range: -20°C +180°C.

Vacuum: 10^{-2} torr.

POSITION	PART NAME	MATERIAL	N.° PIECES
1	BODY	ASTM-A105/LF2	1
2	END CONNECTION	ASTM-A105/LF2	1
3	BALL	A351-CF8/A479-TP304	1
4	BALL SEAT	TFM-MPTFE	2
5	O-RING	FKM	1
6	BODY SEAT	PTFE	1
7	ANTIFRICTION RING	TFM-MPTFE	1
8	V-PACK	PTFE	1
9	STEM SEAT	GRAPHOIL	1
10	PACKING GLAND	A479-TP316	2
11	END STOP	A37 ENP CS	1
12	SPRING WASHER	AISI 50CRV4	2
13	STEM	A479-TP316/17-4-PH	1
14	NUT	6S ENP CS	2
15	HANDLE	A37 ENP CS	1
16	SCREW	A2-70	2
17	UNSCREWING GROWER	AISI 316	1
18	THRUST WASHER	AISI 304	2

SIZE	DN	CODE	D	Y	Z	L	R	P	A	C	T	E	F	ØN	B	KV	PN	KG
1/2"	15	722V0004	90	65	4xM12	36	131	70	52	18	8	10	7	32	4xM5	19,2	16-40	1,50
3/4"	20	722V0005	100	75	4xM12	39	131	75	56	17,5	7,5	10	7	32	4xM5	35	16-40	1,95
1"	25	722V0006	110	85	4xM12	44	174	93	72,5	26	10,5	12	8	42	4xM5	64,5	16-40	2,80
1"1/4	32	722V0007	130	100	4xM16	52	174	97	75,5	25	9,5	12	8	42	4xM5	103,8	16-40	4,45
1"1/2	40	722V0008	140	110	4xM16	64	250	118	93	31	13	16	10	50	4xM6	174	16-40	6,86
2"	50	722V0010	150	125	4xM16	83	250	127	102	32	13	16	10	50	4xM6	301,3	16-40	9,86
2"1/2	65	722V0012	180	145	4xM16	105	321	143	121	38,5	19	20	14	70	4xM8	545,7	16	17,40
2"1/2**	65	722V0812	180	145	8xM16	105	321	143	121	38,5	19	20	14	70	4xM8	545,7	40	17,00
3"	80	722V0014	190	160	8xM16	121	321	154	132	43,5	20	24	18	70	4xM8	872,5	16-40	22,30
4"	100	722V0018	220	180	8xM16	152	381	168	146	42	19	24	18	102	4xM10	1363,3	16	34,75
4"**	100	722V0818	220	190	8xM20	152	381	168	146	42	19	24	18	102	4xM10	1363,3	40	34,40

**Art. 722V08 (PN40).

Certifications

FIRE-SAFE ISO10497

F.E. TESTED ISO15848-1

SIL 3

T.A.LUFT

Spare Parts

- BALL

Code	Material	Size
00304000046	AISI 304	15
00305000075	AISI 304	20
00306000038	AISI 304	25
00307000054	AISI 304	32
00308000029	AISI 304	40
00310000028	AISI 304	50
00312000013	AISI 304	65
00314000016	AISI 304	80
00318007004	AISI 304	100

HANDLES

Code	Material	Size
RI6947	A 37	15
RI6947	A 37	20
RI6948	A 37	25
RI6948	A 37	32
RI6949	A 37	40
RI6949	A 37	50
RI6950	A 37	65
RI6951	A 37	80
RI6951	A 37	100
RI6947	A 37	15
RI6947	A 37	20
RI6948	A 37	25
RI6948	A 37	32
RI6949	A 37	40
RI6949	A 37	50
RI6950	A 37	65
RI6951	A 37	80
RI6951	A 37	100
RI6947	A 37	15
RI6947	A 37	20
RI6948	A 37	25
RI6948	A 37	32
RI6949	A 37	40
RI6949	A 37	50
RI6950	A 37	65
RI6951	A 37	80
RI6951	A 37	100

STEMS ANTISTATIC DEVICE

Code	Material	Size
00404000033	AISI 316	15
00404000033	AISI 316	20
00406000034	AISI 316	25
00406000034	AISI 316	32
00408000023	AISI 316	40
00408000023	AISI 316	50
00412000015	AISI 316	65
00414000024	AISI 316	80
00414000024	AISI 316	100

●

Code	Material	Size
RI6600	TFM + V-PACK	15
RI6601	TFM + V-PACK	20
RI6414	TFM + V-PACK	25
RI6602	TFM + V-PACK	32
RI6520	TFM + V-PACK	40
RI6466	TFM + V-PACK	50
RI6603	TFM + V-PACK	65
RI6604	TFM + V-PACK	80
RI6462	TFM + V-PACK	100