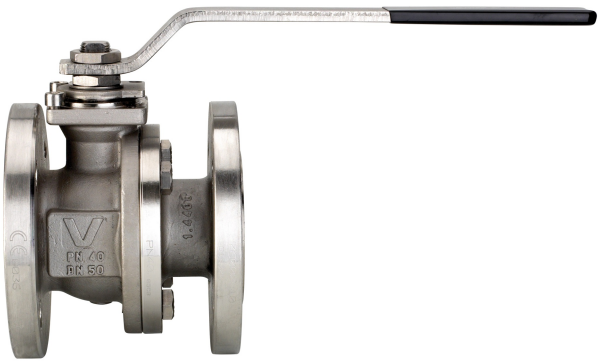

760011

Flanged PN16 stainless steel AISI 316-CF8M ball valve, full bore, EN 558 basic series 27 face to face dimension, Fire Safe, Antistatic Device.

A351-CF8M, Seats-seals PTFE carbographite.

V-Ball option

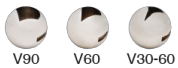

Low temperature design -40°C

Technical specifications

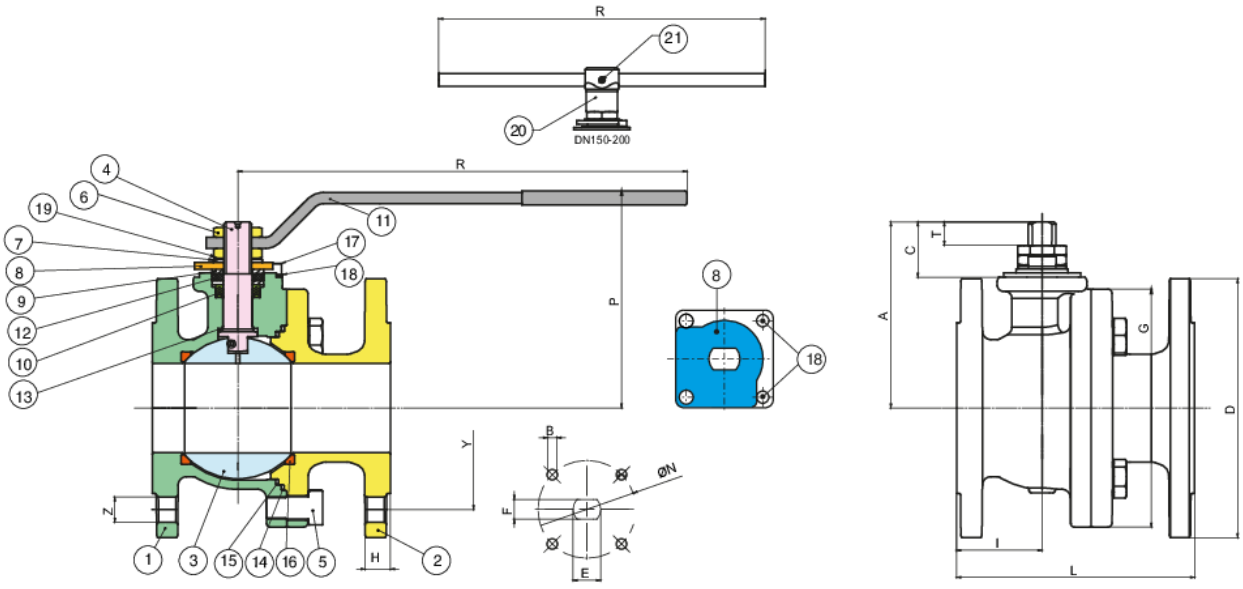

Temperature range: -20°C +160°C.

Vacuum: 10^{-3} torr.

POSITION	PART NAME	MATERIAL	N.° PIECES
1	BODY	1.4408/A351-CF8M	1
2	END CONNECTION	1.4408/A351-CF8M	1
3	BALL	A351-CF8M	1
4	STEM	A479-TP316	1
5	SCREW	A2-70	4-8-12
6	NUT	A2-70	1-2
7	SPRING WASHER	AISI 304	2
8	90° STOP	AISI 316	1
9	PACKING GLAND	AISI 316	2
10	STEM SEAT	PTFE	1
11	HANDLE	AISI 316	1
12	STEM SEAL	GRAPHOIL	1
13	O-RING	FKM	2
14	THRUST WASHER	PTFE+CARBOGRAFITE	1
15	BODY SEAT	GRAPHOIL	1
16	BODY SEAT	PTFE	1
17	BALL SEAT	PTFE+CARBOGRAFITE	2
18	SCREW	A2-70	2
19	WASHER	AISI 304	2
20	BODY HANDLE	EN GJL 250	1
21	SCREW	A2-70	2

SIZE	DN	CODE	D	Y	Z	H	I	L	G	P	R	A	C	T	E	F	ØN	B	KV	PN	KG
1/2"	15	76001104	95	65	4xØ14	16	49	115	71	88	131	52	19	8	M10	7	42-F04	M5	19,2	40	2,50
3/4"	20	76001105	105	75	4xØ14	18	51	120	73,5	93	131	56	19	8	M10	7	42-F04	M5	35	40	3,20
1"	25	76001106	115	85	4xØ14	18	54	125	90,5	89	174	72,5	27,5	13	M12	8	50-F05	M6	64,5	40	4,50
1"1/4	32	76001107	140	100	4xØ18	18	55	130	97	93	174	76	27,5	13	M12	8	50-F05	M6	103,8	40	5,80
1"1/2	40	76001108	150	110	4xØ18	18	51,5	140	114	133	250	107	30	10	M16	10	50-F05	M6	174	40	8,10
2"	50	76001110	165	125	4xØ18	20	57,5	150	136,5	144	321	122	38,5	18	M20	14	70-F07	M8	301,3	40	11,40
2"1/2	65	76001112	185	145	4xØ18	18	61	170	167,6	154	321	133	39,5	18	M20	14	70-F07	M8	545,7	16	15,40
3"	80	76001114	200	160	8xØ18	20	75,5	180	178,6	173	381	151	43	18	M24	18	102-F10	M10	872,5	16	20,50
4"	100	76001118	220	180	8xØ18	20	80	190	208,6	187	381	165	43	18	M24	18	102-F10	M10	1363,3	16	26,80
5"	125	76001119	250	210	8xØ18	22	149	325	273	209	381	187	43	18	M24	18	102-F10	M10	2360,3	16	50,20
6"	150	76001120	285	240	8xØ22	22	157	350	311	305	700	245	68	41	M42	30	125-F12	M12	3671,1	16	75,70
8"	200	76001121	340	295	12xØ22	24	190	400	402	348	700	288	68	41	M42	30	125-F12	M12	6816,6	16	135,5
10"*	250	76001177	405	355	12xØ26	26	225	450	500	-	-	353	81	47	M52	38	140-F14	M16	11171	16	223,5
12"*	300	76001178	460	410	12xØ26	28	250	500	560	-	-	384	81	47	M52	38	140-F14	M16	16806	16	315,5

*TRUNNION supplied without handle.

Certifications

ADR BS 14432

TUV SIL 3

FIRE-SAFE Acc. EN ISO 10497/API 607

F.E. TESTED ISO15848-1