BONOMI GROUP

VALPRES

WAFER PN16



720600

Full bore flanged ball valve PN16, metric thread stainless steel A351-CF8 and A351-CF8M.

A182-F316L/A351-CF3M.

V-Ball option

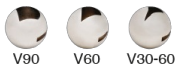

Technical specifications

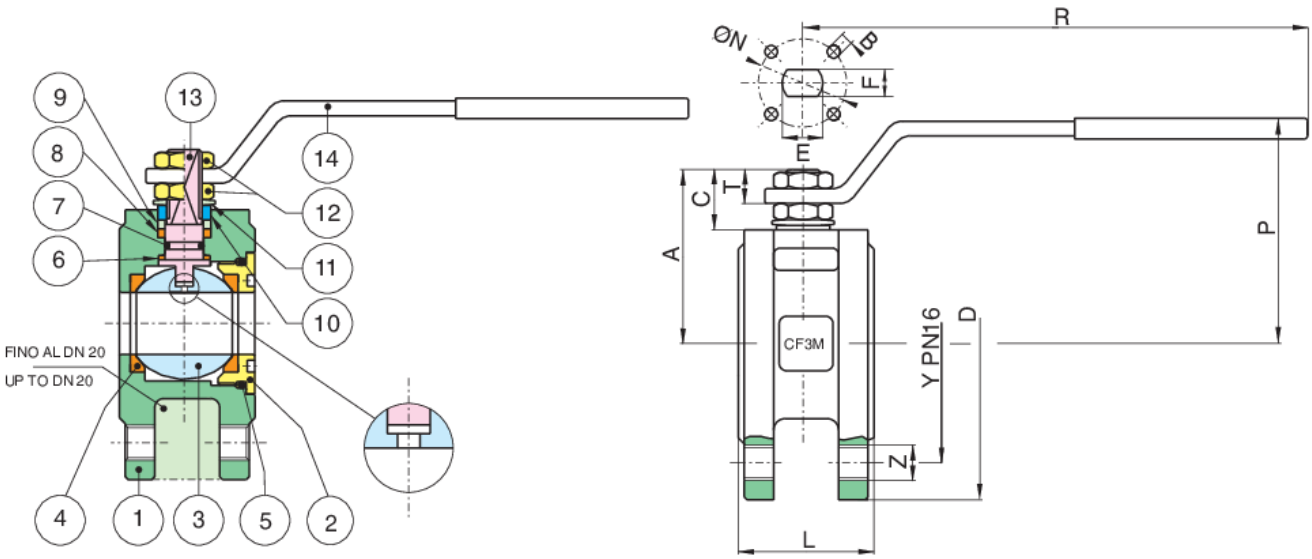

POSITION	PART NAME	MATERIAL	N.° PIECES
1	BODY	A351-CF3M-A479-Tp316L	1
2	END CONNECTION	A351-CF3M-A479-Tp316L	1
3	BALL	A351-CF3M-A479-Tp316L	1
4	BALL SEAT	PTFE	2
5	O-RING	FKM (Viton)	1
6	ANTIFRICTION RING	TFM	1
7	O-RING	FKM (Viton)	1
8	STEM SEAT	PTFE	1
9	PACKING GLAND	A37+Z/P	1
10	90° STOP	AISI 430 (DN15-DN50) A37+Z-P (DN65-DN200)	1
11	SPRING WASHER	51CrV4+Z/P	2
12	NUT	6S+Z/P	2-1
13	STEM	A479-TP316L	1
14	HANDLE	A37+Z/P	1

SIZE	DN	CODE	D	Y	Z	L	R	P	A	C	T	E	F	ØN	B	KV	PN	KG
1/2"	15	72060004	90	65	4xM12	35	131	65	47	15,5	9	10	7	32	4xM5	19,2	16	1,4
3/4"	20	72060005	100	75	4xM12	40	131	69	51,5	15,5	9	10	7	32	4xM5	35	16	1,9
1"	25	72060006	110	85	4xM12	46	174	80	61	19,5	11	12	8	42	4xM5	64,5	16	2,8
1"1/4	32	72060007	130	100	4xM16	54	174	84	64,5	16,5	11	12	8	42	4	103,8	16	4,4
1"1/2	40	72060008	150	110	4xM16	63,5	250	102	78	24,5	13	16	10	50	4xM6	174	16	4,2
2"	50	72060010	165	125	4xM16	82	250	111	87	25	13	16	10	50	4xM6	301,3	16	6,1
2"1/2	65	72060012	185	145	4xM16	103	321	128	104,5	25	18	20	14	70	4xM8	545,7	16	10,00
3"	80	72060014	200	160	8xM16	122	321	138	115	28,5	18	20	14	70	4xM8	872,5	16	13,5
4"	100	72060018	220	190	8xM16	152	381	156	137	34,5	22	24	18	102	4xM10	1363,3	16	20,9

Certifications

F.E. TESTED ISO15848-1

TUV

SIL 3

ATEX FIRE-SAFE (On request)