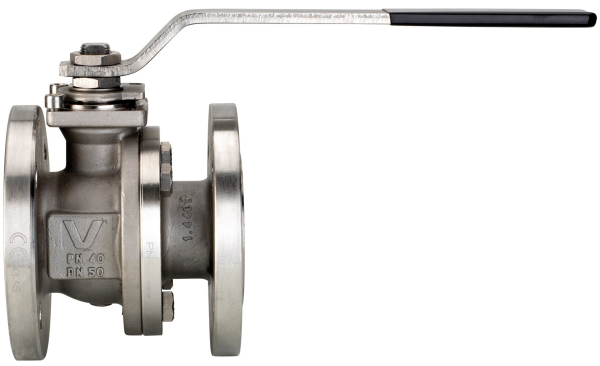

760012*

Flanged PN16 stainless steel AISI 316-CF8M ball valve, full bore, EN 558 basic series 27 face to face dimension, Fire Safe, Antistatic Device.

A182-F304L from bar stock.

V-Ball option

V90 V60 V30-60

Low temperature design -40°C

Technical specifications

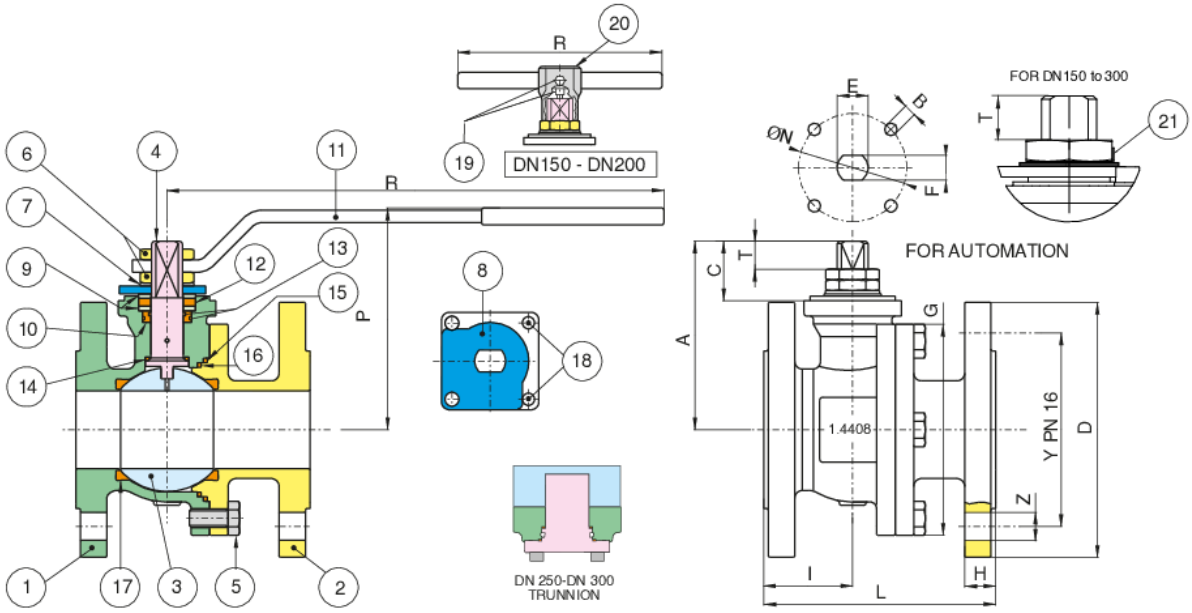

Temperature range: -20°C +160°C.

Vacuum: 10^{-3} torr.

POSITION	PART NAME	MATERIAL	N.° PIECES
1	BODY	A479-TP304L	1
2	END CONNECTION	A479-TP304L	1
3	BALL	A351-CF3	1
4	ANTISTATIC STEM	A479-TP304L	1
5	PACKING GLAND	A479-TP316	2
6	BODY SEAT	PTFE	1
7	BODY SEAT	GRAPHITE	1
8	90° STOP	AISI 316	1
9	BALL SEAT	PTFE	2
10	ANTIFRICTION RING	TFM	1
11	STEM SEAT	GRAPHITE	1
12	STEM SEAT	PTFE	1
13	O-RING	FKM	1
14	O-RING	FKM	1
15	SPRING WASHER	AISI 304	2
16	NUT	A2-70	2
17	SCREW	A2-70	2
18	HANDLE	AISI 316	1
19	SCREW	A2-70	4-8
20	WASHER	AISI 316	2

SIZE	DN	CODE	D	Y	Z	H	I	L	G	P	R	A	C	T	E	F	ØN	B	KV	PN	KG
1/2"	15	76001204	95	65	4xØ14	16	50,5	115	94	88	131	52,5	20	9	10	7	42-F04	M5	19,2	40	4,1
3/4"	20	76001205	105	75	4xØ14	18	53,5	120	104	92,5	131	56	19	7,5	10	7	42-F04	M5	35	40	5,2
1"	25	76001206	115	85	4xØ14	18	53,5	125	114	90	174	72,5	27,5	11,8	12	8	42-F04	M5	64,5	40	6,7
1"1/4	32	76001207	140	100	4xØ18	18	56	130	139	94	174	76	27	11	12	8	42-F04	M5	103,8	40	9,6
1"1/2	40	76001208	150	110	4xØ18	18	58,5	140	149	118	251	93	30	10,8	16	10	50-F05	M6	174	40	12,7
2"	50	76001210	165	125	4xØ18	20	64,5	150	165	132	321	109	34,5	15,9	20	14	50-F05	M8	301,3	40	17,1
2"1/2	65	76001212	185	145	4xØ18	18	72	170	184	142,5	321	121,1	38,5	17,5	20	14	70-F07	M8	545,7	16	22,7
3"	80	76001214	200	160	8xØ18	20	79	180	198	154,5	381	132	39,1	17,3	24	18	70-F07	M10	872,5	16	28,2
4"	100	76001218	220	180	8xØ18	20	82	190	220	167	381	145,2	43	17,4	24	18	102-F10	M10	1363,3	16	37,7

*ISO 5211 pad to be defined upon order receipt.

Certifications

ADR BS 14432

TUV SIL 3

FIRE-SAFE Acc. EN ISO 10497/API 607

F.E. TESTED ISO15848-1