BONOMI GROUP

VALPRES

WAFER PN16



723000

STAINLESS STEEL

Full bore flanged ball valve PN16, in stainless steel A351-CF8M, with ISO 5211 pad and Antistatic Device.

V-Ball option



Technical specifications

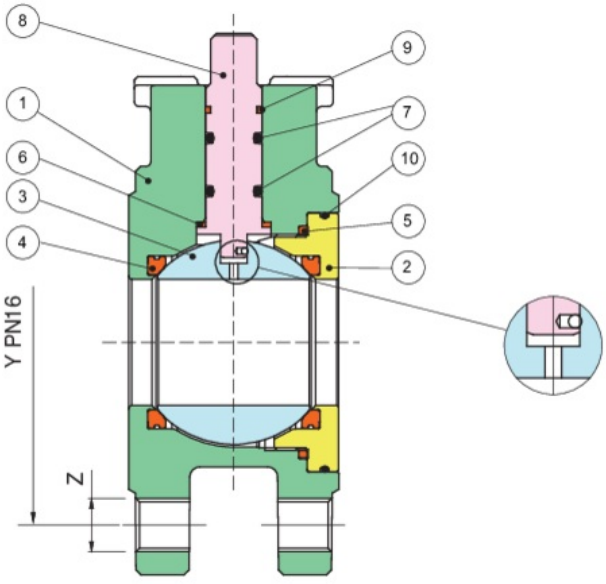

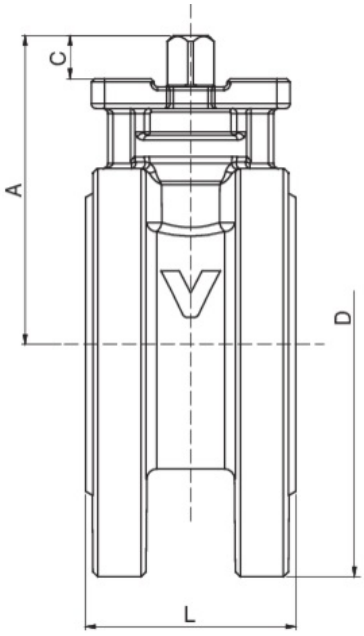

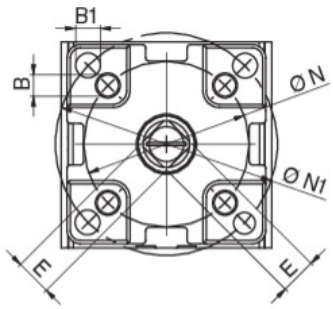

Temperature range: -20°C +180°C.

Vacuum: 10^{-3} torr.

POSITION	PART NAME	MATERIAL	N.° PIECES
1	BODY	A351-CF8M	1
2	END CONNECTION	A479-TP316/A182-F316	1
3	BALL	A351-CF8M/A479-TP316	1
4	BALL SEAT	TFM-MPTFE	2
5	BODY SEAT	PTFE	1
6	THRUST WASHER	TFM-MPTFE	1
7	O-RING	FKM	2
8	STEM	A479-TP316/17-4-PH	1
9	STEM SEAT	PTFE	1
10	O-RING	FKM	1

SIZE	DN	CODE	D	Y	Z	L	A	C	E	ØN	B	ØN1	B1	KV	PN	KG
1"	25	72300006	110	85	4xM12	48	70	11	9	36	5,5	50	7	64,5	16	2,40
1"1/4	32	72300007	130	100	4xM16	54	82	10	9	36	5,5	50	7	103,8	16	3,50
1"1/2	40	72300008	140	110	4xM16	63,5	93	13	11	50	6,5	-	-	174	16	4,50
2"	50	72300010	155	125	4xM16	82	101,5	13,5	11	50	6,5	70	9	301,3	16	6,70
2"1/2	65	72300012	180	145	4xM16	103	128,5	15,5	14	70	9	-	-	545,7	16	10,90
3"	80	72300014	190	160	8xM16	122	138	15	14	70	9	-	-	872,5	16	14,00
4"	100	72300018	220	180	8xM16	152	153	18,5	17	70	9	-	-	1363,3	16	20,90

Available versions: ANSI150M: 723100; ANSI150U: 723101.

Certifications

ATEX

SIL 3

F.E. TESTED ISO15848-1

T.A.LUFT

Spare Parts

- SEATS

Code	Material	Size
RI6216	PTFE	1"
RI6217	PTFE	1"1/4
RI6218	PTFE	1"1/2
RI6179	PTFE	2"
RI6180	PTFE	2"1/2
RI6181	PTFE	3"
RI6219	PTFE	4"

- BALL

Code	Material	Size
00306000031	AISI 316	25
00307000031	AISI 316	32
00308000026	AISI 316	40
00310000080	AISI 316	50
00312000009	AISI 316	65
00314000013	AISI 316	80
00318007001	AISI 316	100

● STEMS

Code	Material	Size
00406000054	17-4-PH	25
00407000040	17-4-PH	32
00408000055	17-4-PH	40
00408000055	17-4-PH	50
00414000025	17-4-PH	65
00414000025	17-4-PH	80
00418000047	17-4-PH	100