BONOMI GROUP

VALPRES

WAFER PN16



720601

Full bore flanged ball valve PN16, metric thread stainless steel A351-CF8 and A351-CF8M.

A351-CF3M ANSI 150 metric.

V-Ball option

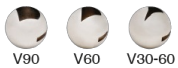

Technical specifications

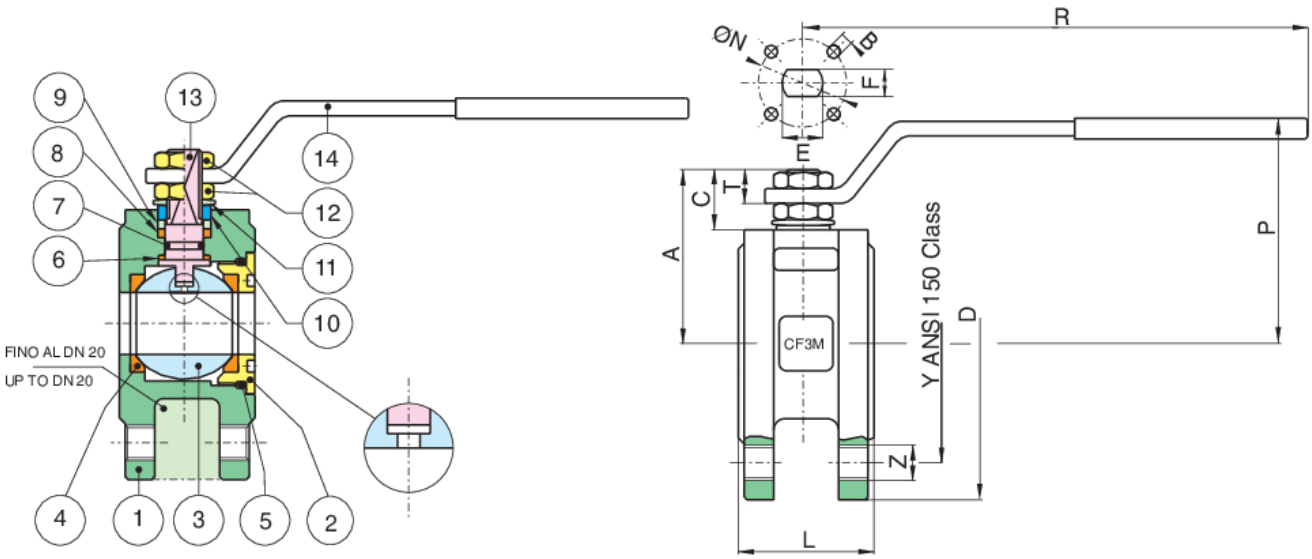

POSITION	PART NAME	MATERIAL	N.° PIECES
1	BODY	A351-CF3M-A479-Tp316L	1
2	END CONNECTION	A479-TP316L	1
3	BALL	A351-CF3M-A479-Tp316L	1
4	BALL SEAT	PTFE	2
5	O-RING	FKM (Viton)	1
6	ANTIFRICTION RING	TFM	1
7	O-RING	FKM (Viton)	1
8	STEM SEAT	PTFE	1
9	PACKING GLAND	A37+Z/P	1
10	90° STOP	AISI 430 (DN15-DN50) A37+Z-P (DN65-DN200)	2-1
11	SPRING WASHER	51CrV4+Z/P	2
12	NUT	A2-70	2
13	STEM	A479-TP316L	1
14	HANDLE	A37+Z/P	1

SIZE	DN	CODE	D	Y	Z	L	R	P	A	C	T	E	F	ØN	B	KV	PN	KG
1/2"	15	72060104	90	60,5	4xM14	35	131	65	47	15,5	9	10	7	32	4xM5	19,2	20	1,30
1"	25	72060106	110	79,2	4xM14	46	174	80	61	17	11	12	8	42	4xM5	64,5	20	2,2
1"1/4	32	72060107	118	88,9	4xM14	54	174	84	64,5	15	11	12	8	42	4xM5	103,8	20	3,7
1"1/2	40	72060108	130	98,6	4xM14	63,5	250	102	78	24,5	13	16	10	50	4xM6	174	20	3,70
2"1/2	65	72060112	178	139,7	4xM16	103	321	128	104,5	25	18	20	14	70	4xM8	545,7	20	10,00
3"	80	72060114	190	152,4	4xM16	122	321	138	115	28,5	18	20	14	70	4xM8	872,5	20	12,80

Certifications

F.E. TESTED ISO15848-1

TUV

SIL 3

ATEX FIRE-SAFE (On request)