

721V00

Full bore flanged ball valve PN16/40 stainless steel A351- CF8M, EN 558 basic series 100, metric thread, V-Pack stem seal, Fire Safe, Antistatic Device.

V-Ball option

V90 V60 V30-60

V-PACK

Low temperature design -40°C

Technical specifications

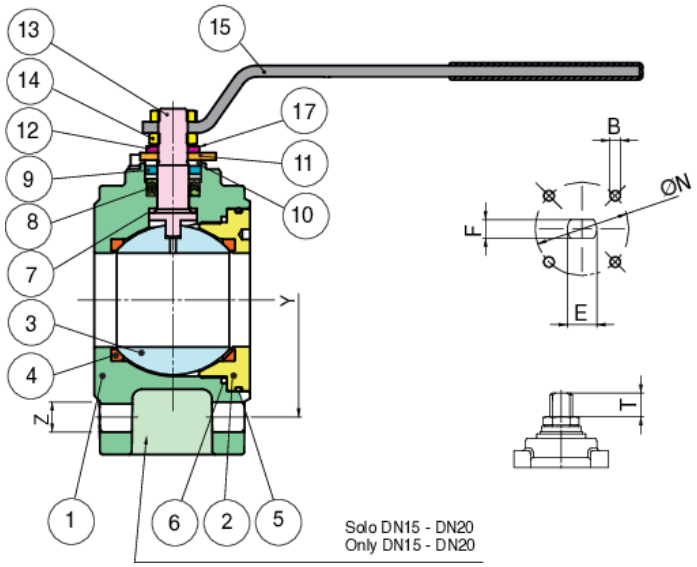

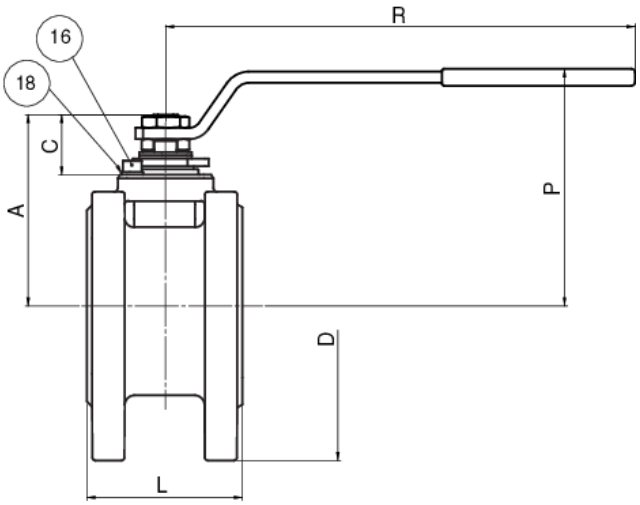

Temperature range: -40°C +180°C.

Vacuum: 10^{-2} torr.

POSITION	PART NAME	MATERIAL	N.° PIECES
1	BODY	A351-CF8M/A479-TP316	1
2	END CONNECTION	A351-CF8M/A479-TP316	1
3	BALL	A351-CF8M/A479-TP316	1
4	BALL SEAT	TFM-MPTFE	2
5	O-RING	FKM	1
6	BODY SEAT	PTFE	1
7	ANTIFRICTION RING	TFM-MPTFE	1
8	V-PACK	PTFE	1
9	STEM SEAT	GRAPHOIL	1
10	PACKING GLAND	A479-TP316	2
11	END STOP	AISI 316	1
12	SPRING WASHER	AISI 304	2
13	STEM	A479-TP316/17-4-PH	1
14	NUT	A2-70	2
15	HANDLE	A37 ENP CS	1
16	SCREW	A2-70	2
17	UNSCREWING GROWER	AISI 316	1
18	THRUST WASHER	AISI 316	2

SIZE	DN	CODE	D	Y	Z	L	R	P	A	C	T	E	F	ØN	B	KV	PN	KG
1/2"	15	721V0004	95	65	4xM12	36	131	70	52	18	8	10	7	32	4xM5	19,2	16-40	1,64
3/4"	20	721V0005	105	75	4xM12	39	131	75	56	17,5	7,5	10	7	32	4xM5	35	16-40	2,15
1"	25	721V0006	115	85	4xM12	44	174	93	72,5	26	10,5	12	8	42	4xM5	64,5	16-40	2,56
1"1/4	32	721V0007	140	100	4xM16	52	174	97	75,5	25	9,5	12	8	42	4xM5	103,8	16-40	3,86
1"1/2	40	721V0008	150	110	4xM16	64	250	118	93	31	13	16	10	50	4xM6	174	16-40	5,35
2"	50	721V0010	165	125	4xM16	83	250	127	102	32	13	16	10	50	4xM6	301,3	16-40	7,50
2"1/2	65	721V0012	185	145	4xM16	105	321	143	121	38,5	19	20	14	70	4xM8	545,7	16	12,30
2"1/2**	65	721V7812	185	145	8xM16	105	321	143	121	38,5	19	20	14	70	4xM8	545,7	40	12,10
3"	80	721V0014	200	160	8xM16	121	321	154	132	43,5	19	24	18	70	4xM8	872,5	16-40	16,83
4"	100	721V0018	220	180	8xM16	152	381	168	146	42	19	24	18	102	4xM10	1363,3	16	24,30
4"**	100	721V7818	220	190	8xM20	152	381	168	146	42	19	24	18	102	4xM10	1363,3	40	24,00

**Art. 721V78 (PN40).

Suitable for methane gas.

Certifications

FIRE-SAFE ISO10497

SIL 3

F.E. TESTED ISO15848-1

T.A.LUFT

Spare Parts

- BALL

Code	Material	Size
00304000037	AISI 316	15
00305000031	AISI 316	20
00306000031	AISI 316	25
00307000031	AISI 316	32
00308000026	AISI 316	40
00310000080	AISI 316	50
00312000009	AISI 316	65
00314000013	AISI 316	80
00318007006	AISI 316	100

HANDLES

Code	Material	Size
RI6947	A 37	15
RI6947	A 37	20
RI6948	A 37	25
RI6948	A 37	32
RI6949	A 37	40
RI6949	A 37	50
RI6950	A 37	65
RI6951	A 37	80
RI6951	A 37	100
RI6947	A 37	15
RI6947	A 37	20
RI6948	A 37	25
RI6948	A 37	32
RI6949	A 37	40
RI6949	A 37	50
RI6950	A 37	65
RI6951	A 37	80
RI6951	A 37	100
RI6947	A 37	15
RI6947	A 37	20
RI6948	A 37	25
RI6948	A 37	32
RI6949	A 37	40
RI6949	A 37	50
RI6950	A 37	65
RI6951	A 37	80
RI6951	A 37	100

STEMS ANTISTATIC DEVICE

Code	Material	Size
00404000033	AISI 316	15
00404000033	AISI 316	20
00406000034	AISI 316	25
00406000034	AISI 316	32
00408000023	AISI 316	40
00408000023	AISI 316	50
00412000015	AISI 316	65
00414000024	AISI 316	80
00414000024	AISI 316	100

●

Code	Material	Size
RI6600	TFM + V-PACK	15
RI6601	TFM + V-PACK	20
RI6414	TFM + V-PACK	25
RI6602	TFM + V-PACK	32
RI6520	TFM + V-PACK	40
RI6466	TFM + V-PACK	50
RI6603	TFM + V-PACK	65
RI6604	TFM + V-PACK	80
RI6462	TFM + V-PACK	100