700004



Full bore stainless steel AISI 316-CF8M,ball valve, F/F threading, ISO 5211.

Red Butterfly handle in stainless steel 1/8”-1/4”-3/8”-1/2”.

V-Ball option

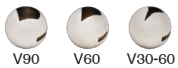



Low temperature design
-40°C ON DEMAND

Technical specifications

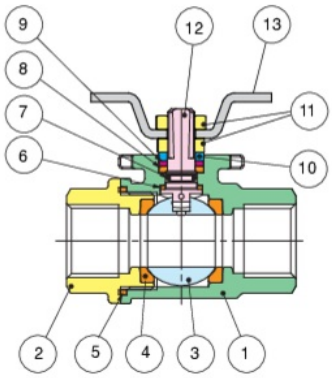

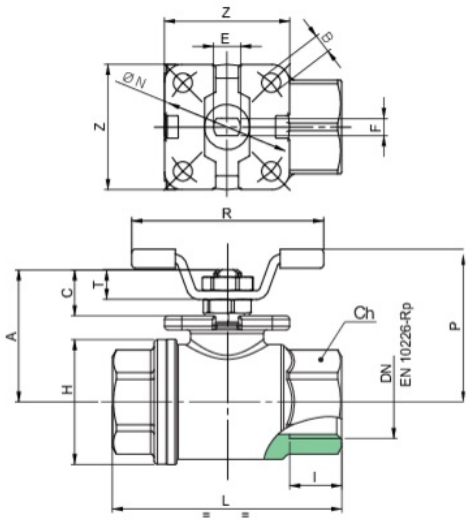

POSITION	PART NAME	MATERIAL	N.° PIECES
1	BODY	A351-CF8M	1
2	END CONNECTION	A351-CF8M	1
3	BALL	A479-TP316/A351-CF8M	1
4	BALL SEAT	PTFE	2
5	BODY SEAT	PTFE	1
6	THRUST WASHER	TFM	1
7	O-RING	FKM	1
8	STEM SEAT	PTFE	1
9	PACKING GLAND	AISI 303	1
10	END STOP	AISI 430	1
11	NUT	A2-70	2
12	STEM	A479-TP316	1
13	HANDLE	AISI 430	1

SIZE	DN	CODE	BOX	I	L	H	CH	R	P	A	C	E	F	ØN ISO 5211	B	Z	KV	PN	KG	T
1/8"	6	70000401	10	7,4	55	30	ES.22	55	41	35	13,5	8	5	36	5,5	36	5	140	0,28	9
1/4"	8	70000402	10	11	55	30	ES.22	55	41	35	13,5	8	5	36	5,5	36	5,5	140	0,26	9
3/8"	10	70000403	10	11,4	55	30	ES.22	55	41	35	13,5	8	5	36	5,5	36	8,5	140	0,25	9
1/2"	15	70000404	10	15	66	36	ES.27	55	44	38	13,5	8	5	36	5,5	36	19,2	140	0,34	9