INTER-GAS



707800GB

Underground fully welded painted ball valve in carbon steel ASTM A105, trunnion ball, reduced bore, Butt Weld end connection, realized in accordance to UNI 9734 and EN 13774, complete with external extended stem and 90° manual operation gear.

Technical specifications

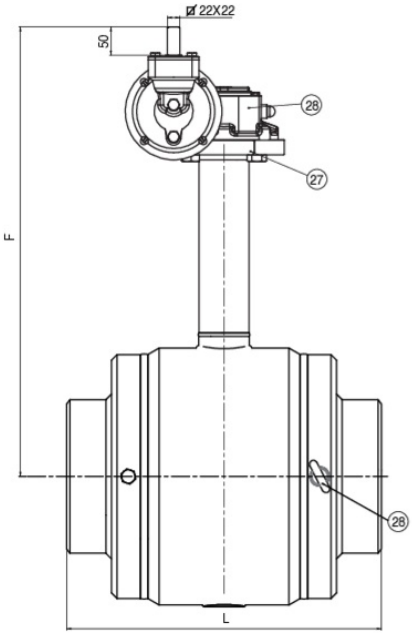

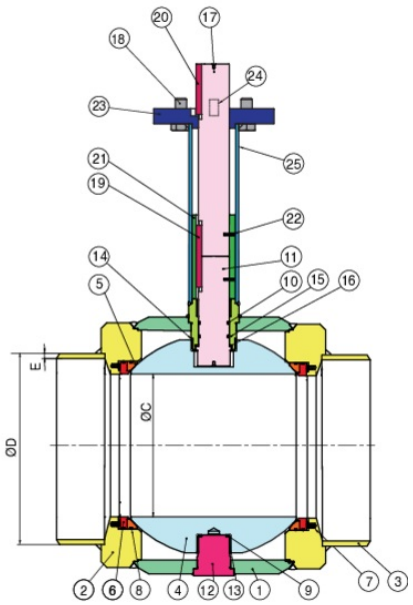

Temperature range: -10°C +60°C.

POSITION	PART NAME	MATERIAL	N.° PIECES
1	BODY	EN10210-1 S355J2H	1
2	END CONNECTION	ASTM A105	2
3	END CONNECTION	ASTM A106 GR B	2
4	BALL	A350-LF2+ENP 30µm	1
5	BALL SEAT	PTFE+23% CARBONE+2% GRAFITE	2
6	SEAT RING	EN10210-1 S355J2H	2
7	SPRING	AISI 302	32
8	O-RING	NBR	4
9	THRUST WASHER	PTFE	1
10	O-RING	FKM	2
11	STEM	A479-TP410	1
12	LOWER TRUNNION	ASTM A105	1
13	PACKING GLAND	CARBON STEEL	2
14	PACKING GLAND	CARBON STEEL	1
15	UPPER TRUNNION	ASTM A105	1
16	STEM SEAT	PTFE+23% CARBONE+2% GRAFITE	1
17	EXTENSION STEM	AISI 1040	1
18	SCREW	CARBON STEEL	4
19	FORELOCK	AISI4140	1
20	FORELOCK	AISI4140	1
21	PACKING GLAND	ASTM A105	1
22	STRAIGHT PIN	CARBON STEEL	2
23	CAP	ASTM A105	1
24	STRAIGHT PIN	A564-TP630 H1150D (17-4-PH)	2
25	EXTERNAL STEM EXTENSION	ASTM A106 GR B	1
26	MANUAL GEAR	ENGJS 400	1
27	LABEL	A479-TP304	1
28	LIFTING EYE BOLTS	CARBON STEEL	2

SIZE	DN	CODE	L	C	D	E	F	PN	KG
10"x8"	250x200	70780082GB	559	203	273	9,27	800	16	251,00
12"x10"	300x250	70780084GB	635	254	323,8	10,3	800	16	366,00
14"x10"	350x250	70780085GB	762	254	355,6	14,3	900	16	395,00
14"x12"	350x300	70780086GB	762	305	355,6	14,3	900	16	577,00
16"x12"	400x300	70780087GB	838	305	406,4	14,3	900	16	590,00

Epoxy painting 100 micron thick.