

760801

STAINLESS STEEL

Flanged PN16 stainless steel AISI A351-CF8M ball valve, full bore, EN 558 basic series 1 face to face dimension, Fire Safe, Antistatic Device.

V-Ball option
V90 V60 V30-60

option
V-PACK

Low temperature design
-40°C ON DEMAND

Technical specifications

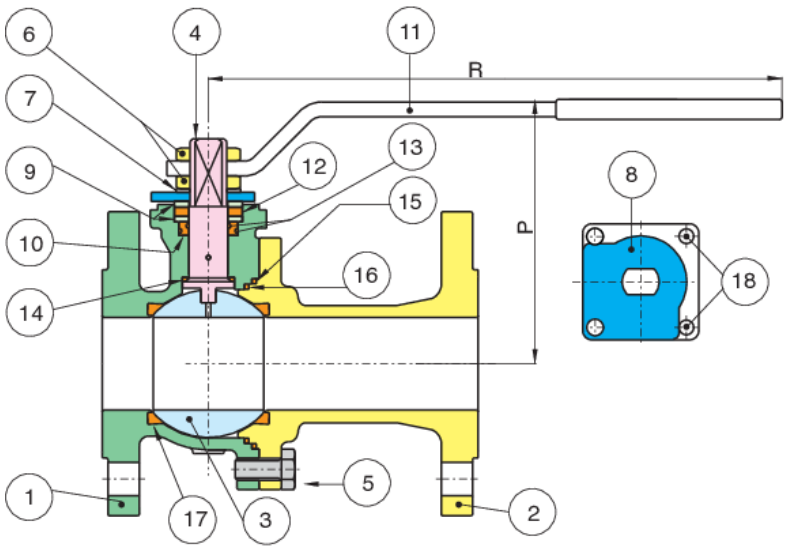

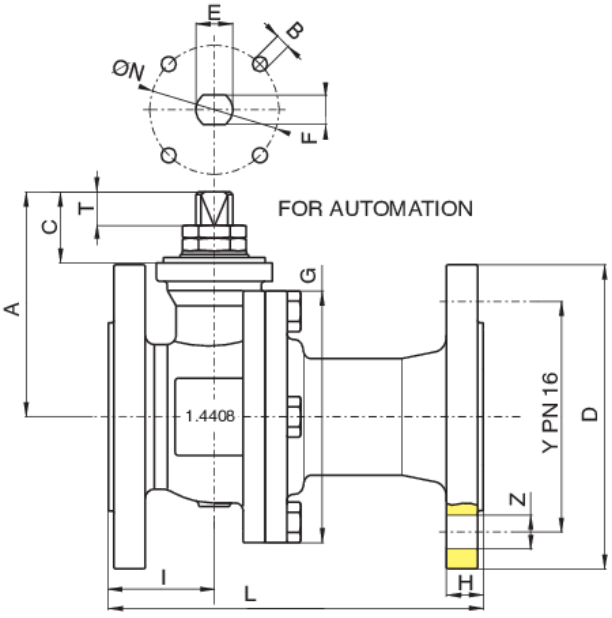

Temperature range: -20°C +160°C.

Vacuum: 10^{-3} torr.

POSITION	PART NAME	MATERIAL	N.° PIECES
1	BODY	1.4408/A351-CF8M	1
2	END CONNECTION	1.4408/A351-CF8M	1
3	BALL	A479-TP316/A351-CF8M	1
4	STEM	A479-TP316/17-4-PH	1
5	SCREW	STAINLESS STEEL	4-8
6	NUT	STAINLESS STEEL	2
7	SPRING WASHER	STAINLESS STEEL	2
8	90° STOP	A182-F316	1
9	PACKING GLAND	A182-F316	2
10	STEM SEAT	PTFE	1
11	HANDLE	A182-F316	1
12	STEM SEAL	GRAPHOIL	1
13	O-RING	FKM	2
14	THRUST WASHER	PTFE	1
15	BODY SEAT	GRAPHOIL	1
16	BODY SEAT	PTFE	1
17	BALL SEAT	PTFE	2
18	SCREW	STAINLESS STEEL	2

SIZE	DN	CODE	D	Y	Z	H	I	L	G	P	R	A	C	T	E	F	ØN	B	KV	PN	KG
1/2"	15	76080104	95	65	4xØ14	16	49	130	71	88	131	52	19	8	M10	7	42-F04	M5	19,2	40	3,00
3/4"	20	76080105	105	75	4xØ14	18	51,5	150	73,5	93	131	56	19	8	M10	7	42-F04	M5	35	40	3,50
1"	25	76080106	115	85	4xØ14	18	53	160	90,5	89	174	72,5	27,5	13	M12	8	50-F05	M6	64,5	40	4,00
1"1/4	32	76080107	140	100	4xØ18	18	55	180	97	112	174	76	27,5	13	M12	8	50-F05	M6	103,8	40	6,10
1"1/2	40	76080108	150	110	4xØ18	18	51,5	200	114	133	250	107	30	10	M16	10	50-F05	M6	174	40	10,00
2"	50	76080110	165	125	4xØ18	20	57,5	230	136,5	144	321	122	38,5	18	M20	14	70-F07	M8	301,3	40	12,50
2"1/2	65	76080112	185	145	4xØ18	18	61	290	167,6	154	321	133	39,5	18	M20	14	70-F07	M8	545,7	16	15,00
3"	80	76080114	200	160	8xØ18	20	75,5	310	178,6	173	381	151	43	18	M24	18	102-F10	M10	872,5	16	23,00
4"	100	76080118	220	180	8xØ18	20	80	350	208,6	187	381	165	43	18	M24	18	102-F10	M10	1363,3	16	31,00

Certifications

TUV SIL 3

FIRE-SAFE Acc. EN ISO 10497/API 607

F.E. TESTED ISO15848-1

Spare Parts

- HANDLES

Code	Material	Size
RI2180	AISI 316	15
RI2180	AISI 316	20
RI2181	AISI 316	25
RI2181	AISI 316	32
RI2182	AISI 316	40
RI2183	AISI 316	50
RI2183	AISI 316	65
RI2184	AISI 316	80
RI2184	AISI 316	100
RI2184	AISI 316	125
RI2021	A 37	150
RI2021	A 37	200

SEATS

Code	Material	Size
RI2322	PTFE	15
RI2323	PTFE	20
RI2324	PTFE	25
RI2325	PTFE	32
RI2326	PTFE	40
RI2327	PTFE	50
RI2646	PTFE	50 SPLIT WAFER
RI2328	PTFE	65
RI2329	PTFE	80
RI2330	PTFE	100DIN
RI2346	PTFE	100 ANSI
RI2331	PTFE	125
RI2332	PTFE	150
RI2478	PTFE	200
RI2659	PTFE	250
RI2849	PTFE	300

BALL

Code	Material	Size
00304000037	AISI 316	15
00305000031	AISI 316	20
00306000031	AISI 316	25
00307000031	AISI 316	32
00308000026	AISI 316	40
00310000080	AISI 316	50
00312000009	AISI 316	65
00314000013	AISI 316	80
00318007006	AISI 316	100DIN
00318007001	AISI 316	100ANSI
00319007005	AISI 316	125
00320007002	AISI 316	150
00321000027	AISI 316	200

STEMS ANTISTATIC DEVICE

Code	Material	Size
00404000033	AISI 316	15
00404000033	AISI 316	20
00406000020	AISI 316	25
00406000020	AISI 316	32
00412000014	AISI 316	65

STEMS

Code	Material	Size
00408000022	AISI 316	40
00410000023	AISI 316	50
00414000006	AISI 304	80
00414000006	AISI 304	100
00414000006	AISI 304	125
00420000007*	AISI 316	150
00420000007*	AISI 316	200
00477000005	17-4-PH	250
00477000005	17-4-PH	300