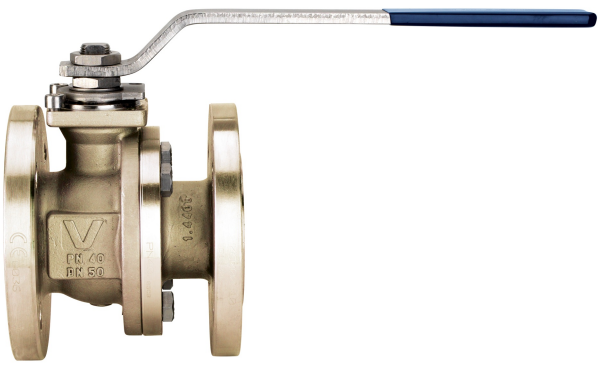

760V01

CARBON STEEL

Flanged PN 16 zinc-plated painted (DN>100) carbon steel A352-LCB ball valve, full bore, V-Pack stem seal, En 558 basic serie 27 face to face dimension, Fire Safe, Antistatic Device.

V-Ball option
V90 V60 V30-60

V-PACK

Low temperature design -40°C

Technical specifications

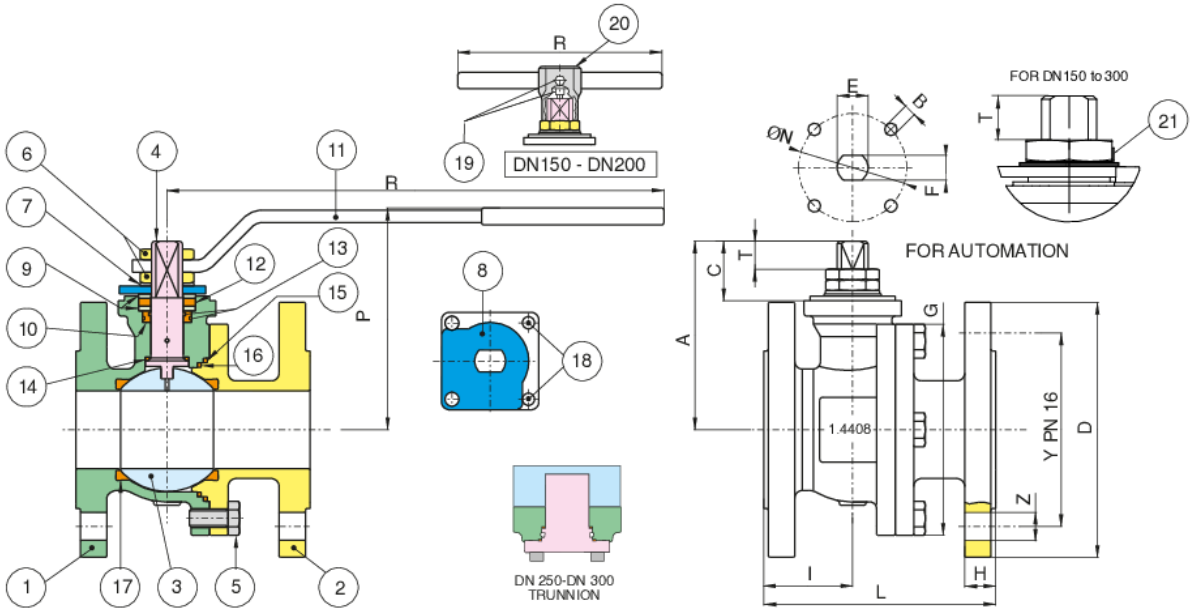

Temperature range: -40°C +180°C.

Vacuum: 10^{-2} torr.

POSITION	PART NAME	MATERIAL	N.° PIECES
1	BODY	A352-LCB	1
2	END CONNECTION	A352-LCB	1
3	BALL	A351-CF8/A479-TP304	1
4	STEM	A479-TP304/17-4-PH	1
5	SCREW	8.8 ENP CS	*4-8-12
6	NUT	6S ENP CS	**1-2
7	SPRING WASHER	50CRV4	2
8	90° STOP	A37 ENP CS	1
9	PACKING GLAND	A479-TP316	2
10	STEM SEAT	PTFE	1
11	HANDLE	A37 ENP CS	1
12	STEM SEAL	GRAPHOIL	1
13	THRUST WASHER	PTFE	1
14	BODY SEAT	GRAPHOIL	1
15	BODY SEAT	PTFE	1
16	BALL SEAT	TFM-MPTFE	2
17	SCREW	A2-70	2
18	WASHER	AISI 304	2
19	UNSCREWING GROWER	AISI 316	1
20	BODY HANDLE DN150-200	EN GJL 250	1
21	SCREW	8.8 CS	1

*DN15-DN65=4 - DN80-125=8 - DN150-200=12

**DN15-DN125=2 - DN150-200=1

SIZE	DN	CODE	D	Y	Z	H	I	L	G	P	R	A	C	T	E	F	ØN	B	KV	PN	KG
1/2"	15	760V0104	95	65	4xØ14	16	49	115	71	88	131	52	19	8	M10x1,25	7	42-F04	M5	19,2	40	2,50
3/4"	20	760V0105	105	75	4xØ14	18	51	120	73,5	93	131	56	19	8	M10x1,25	7	42-F04	M5	35	40	3,20
1"	25	760V0106	115	85	4xØ14	18	54	125	90,5	89	174	72,5	27,5	13	M12x1,5	8	50-F05	M6	64,5	40	4,50
1"1/4	32	760V0107	140	100	4xØ18	18	55	130	97	93	174	76	27,5	13	M12x1,5	8	50-F05	M6	103,8	40	5,80
1"1/2	40	760V0108	150	110	4xØ18	18	51,5	140	114	133	250	107	30	10	M16x1,5	10	50-F05	M6	174	40	8,10
2"	50	760V0110	165	125	4xØ18	20	57,5	150	136,5	144	321	122	38,5	18	M20x1,5	14	70-F07	M8	301,3	40	11,40
2"1/2	65	760V0112	185	145	4xØ18	18	61	170	167,6	154	321	133	39,5	18	M20x1,5	14	70-F07	M8	545,7	16	15,40
3"	80	760V0114	200	160	8xØ18	20	75,5	180	178,6	173	381	151	43	18	M24x2	18	102-F10	M10	872,5	16	20,50
4"	100	760V0118	220	180	8xØ18	20	80	190	208,6	187	381	165	43	18	M24x2	18	102-F10	M10	1363,3	16	26,80
5"	125	760V0119	250	210	8xØ18	22	149	325	273	209	381	187	43	18	M24x2	18	102-F10	M10	2360,3	16	50,20
6"	150	760V0120	285	240	8xØ22	22	157	350	311	305	700	245	68	41	M42x3	30	125-F12	M12	3671,1	16	75,70
8"	200	760V0121	340	295	12xØ22	24	190	400	402	348	700	288	68	41	M42x3	30	125-F12	M12	6816,6	16	104,00

Certifications

TUV

FIRE-SAFE Acc. EN ISO 10497/API 607

F.E. TESTED ISO15848-1

Spare Parts

BALL

Code	Material	Size
00304000046	AISI 304	15
00305000075	AISI 304	20
00306000038	AISI 304	25
00307000054	AISI 304	32
00308000029	AISI 304	40
00310000028	AISI 304	50
00312000013	AISI 304	65
00314000016	AISI 304	80
00318007004	AISI 304	100

STEMS ANTISTATIC DEVICE

Code	Material	Size
00404000033	AISI 316	15
00404000033	AISI 316	20
00406000020	AISI 316	25
00406000020	AISI 316	32
00412000014	AISI 316	65

STEMS

Code	Material	Size
00408000022	AISI 316	40
00410000023	AISI 316	50

SEATS

Code	Material	Size
RI6612	TFM + V-PACK	15
RI6613	TFM + V-PACK	20
RI6436	TFM + V-PACK	25
RI6614	TFM + V-PACK	32
RI6615	TFM + V-PACK	40
RI6616	TFM + V-PACK	50
RI6617	TFM + V-PACK	65
RI6618	TFM + V-PACK	80
RI6463	TFM + V-PACK	100
RI6619	TFM + V-PACK	125
RI6620	TFM + V-PACK	150
RI6621	TFM + V-PACK	200