

725000

Full bore stainless steel A351-CF8M flanged ball valve, Wafer type, Antistatic Device.

V-Ball option



Technical specifications

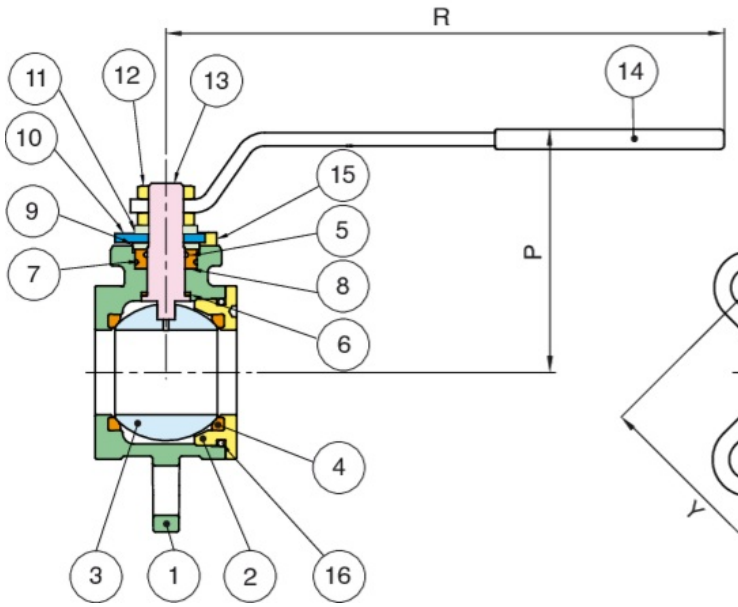

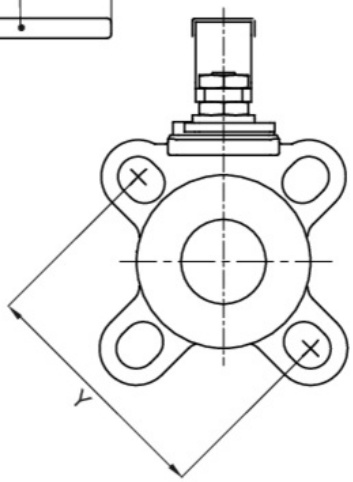

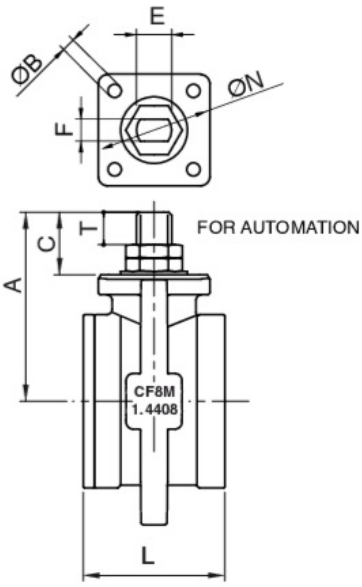

Temperature range: -20°C +160°C.

Vacuum: 10^{-3} torr.

POSITION	PART NAME	MATERIAL	N.° PIECES
1	BODY	A351-CF8M	1
2	END CONNECTION	A182-F316	1
3	BALL	A479-TP316/A351-CF8M	1
4	BALL SEAT	PTFE	2
5	O-RING	FKM	1
6	THRUST WASHER	PTFE	1
7	RING	FKM	1
8	STEM SEAT	PTFE	1
9	PACKING GLAND	A182-F316	1
10	END STOP	CARBON STEEL	1
11	SPRING WASHER	CARBON STEEL	2
12	NUT	CARBON STEEL	2
13	STEM	A479-TP316/17-4-PH	1
14	HANDLE	CARBON STEEL	1
15	SCREW	CARBON STEEL	2
16	O-RING	FKM	1

SIZE	DN	CODE	Y	L	R	P	A	C	T	E	F	ØN	B	KV	PN	KG
1"	25	72500006	PN10 - PN16 - PN40 - ANSI150	46	174	91	71,5	23	9	M12	8	42	M5	64,5	40	1,30
1"1/4	32	72500007	PN10 - PN16 - PN40 - ANSI150	54	174	95	75	23	9	M12	8	42	M5	103,8	40	1,65
1"1/2	40	72500008	PN10 - PN16 - PN40 - ANSI150	63,5	250	110	85	28	12,5	M16	10	50	M6	174	40	2,15
2"	50	72500010	PN10 - PN16 - PN40 - ANSI150	82	250	119	93,5	28	12,5	M16	10	50	M6	301,3	40	3,75
2"1/2	65	72500012	PN10 - PN16 - ANSI150	103	321	145	121,5	33,5	16	M20	14	70	M8	545,7	20	7,35
3"	80	72500014	PN10 - PN16 - ANSI150	122	321	154	131	33,5	16	M20	14	70	M8	872,5	20	10,30
4"*	100	72500018	PN10 - PN16 - ANSI150	152	321	167	144	33,5	16	M20	14	70	M8	1363,3	20	16,00

*V-Ball not available for size 4".

Certifications

TUV SIL 3

ATEX

Spare Parts

- HANDLES

Code	Material	Size
RI2018	A 37	15
RI2018	A 37	20
RI2019	A 37	25
RI2019	A 37	32
RI2020	A 37	40
RI2020	A 37	50
RI2016	A 37	65
RI2016	A 37	80
RI2017	A 37	100
RI2017	A 37	125
RI2021	A 37	150
RI2021	A 37	200

SEATS

Code	Material	Size
RI2618	PTFE	25
RI2619	PTFE	32
RI2620	PTFE	40
RI2621	PTFE	50
RI2622	PTFE	65
RI2623	PTFE	80
RI2624	PTFE	100

BALL

Code	Material	Size
00306000031	AISI 316	25
00307000031	AISI 316	32
00308000026	AISI 316	40
00310000080	AISI 316	50
00312000009	AISI 316	65
00314000013	AISI 316	80
00318000023	AISI 316	100

STEMS ANTISTATIC DEVICE

Code	Material	Size
00406000034	AISI 316	25
00406000034	AISI 316	32
00408000034	AISI 316	40
00408000034	AISI 316	50
00412000034	AISI 316	65
00412000034	AISI 316	80
00412000034	AISI 316	100