BONOMI GROUP

VALPRES

RADIAMONT



710085

Three-piece full bore A352-LCB blued carbon steel ball valve: threaded F/F, butt/socket-welded ISO PAD 5211.

F/F NPT for steam.

V-Ball option



Low temperature design
-40°C ON DEMAND

Technical specifications

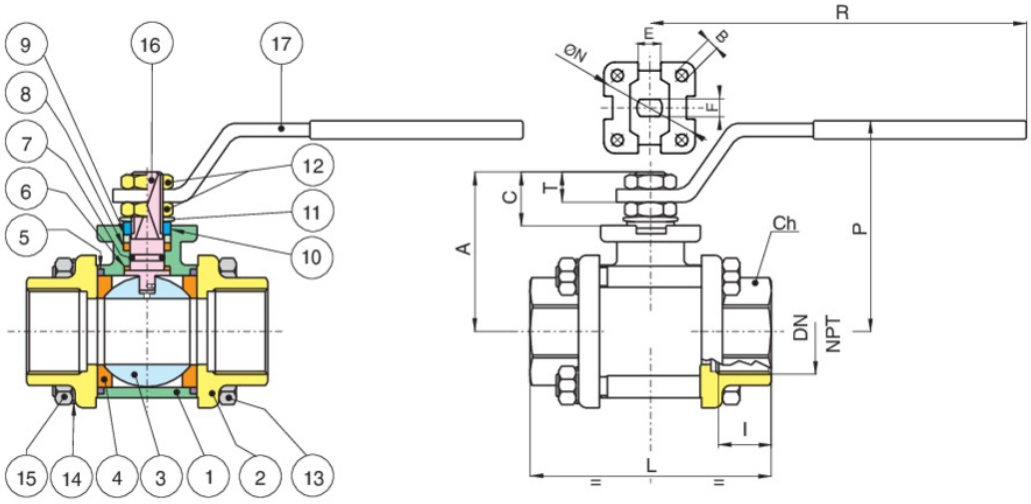

Carbon steel: Limiti di temperatura: -20°C +160°C.

POSITION	PART NAME	MATERIAL	N.° PIECES
1	BODY	A352-LCB	1
2	END CONNECTION	A352-LCB	2
3	BALL	A479-TP304/A351-CF8	1
4	BALL SEAT	PTFE	2
5	BODY SEAT	PTFE	2
6	ANTIFRICTION RING	TFM	1
7	O-RING	FKM (Viton)	1
8	STEM SEAT	PTFE	1
9	PACKING GLAND	A37+Z/P	1
10	90° STOP	INOX AISI 430 (1-4”-2”) A37 Z/P (2”1-2-4”)	2
11	SPRING WASHER	51CrV4+Z/P	2
12	NUT	6S+Z/P	2
13	SCREW	8.8+Z/P	4
14	WASHER	C60S+Z/P	4
15	NUT	8.8+Z/P	4
16	STEM	A479-TP304	1
17	HANDLE	A37+Z/P	1

SIZE	DN	CODE	BOX	I	L	CH	R	P	A	C	E	F	N	B	KV	PN	KG	T
1/4"	8	71008502	10	11	57	OT.22	110	50	35	13,5	8	5	-	-	5,5	64	0,28	9
3/8"	10	71008503	10	11,4	57	OT.22	110	50	35	13,5	8	5	-	-	8,5	64	0,27	9
1/2"	15	71008504	6	15	65	OT.27	131	64	47	15	10	7	36	6	19,2	64	0,50	10
3/4"	20	71008505	5	16,3	76	OT.32	131	68	52	16	10	7	42	6	35	40	0,70	10
1"	25	71008506	2	19,1	92	OT.41	174	79	60	19,5	12	8	42	6	64,5	40	1,20	12,5
1"1/4	32	71008507	4	21,4	106	OT.50	174	83	64	19,5	12	8	42	6	103,8	25	1,70	12,5
1"1/2	40	71008508	2	21,4	116	OT,55	250	100	79	24	16	10	50	6,5	174	25	2,50	16,5
2"	50	71008510	2	25,7	136	OT.70	250	107	86	24	16	10	50	6,5	301,3	25	3,90	16,5
2"1/2	65	71008512	1	30,2	153	Ø90	321	126	103	28	20	14	70	M8	545,7	16	8,15	18
3"	80	71008514	1	33,3	180	Ø105	321	137	114	28	20	14	70	M8	872,5	16	12,80	18
4"	100	71008518	1	39,3	217	Ø130	381	156	137	34,5	24	18	102	M10	1363	16	21,50	22

Certifications

TUV

ATEX (On request)

SIL 3