

700023

Full bore stainless steel AISI 316-CF8M ball valve, F/F threading.

NPT B.1.20.1 F/F.

Technical specifications

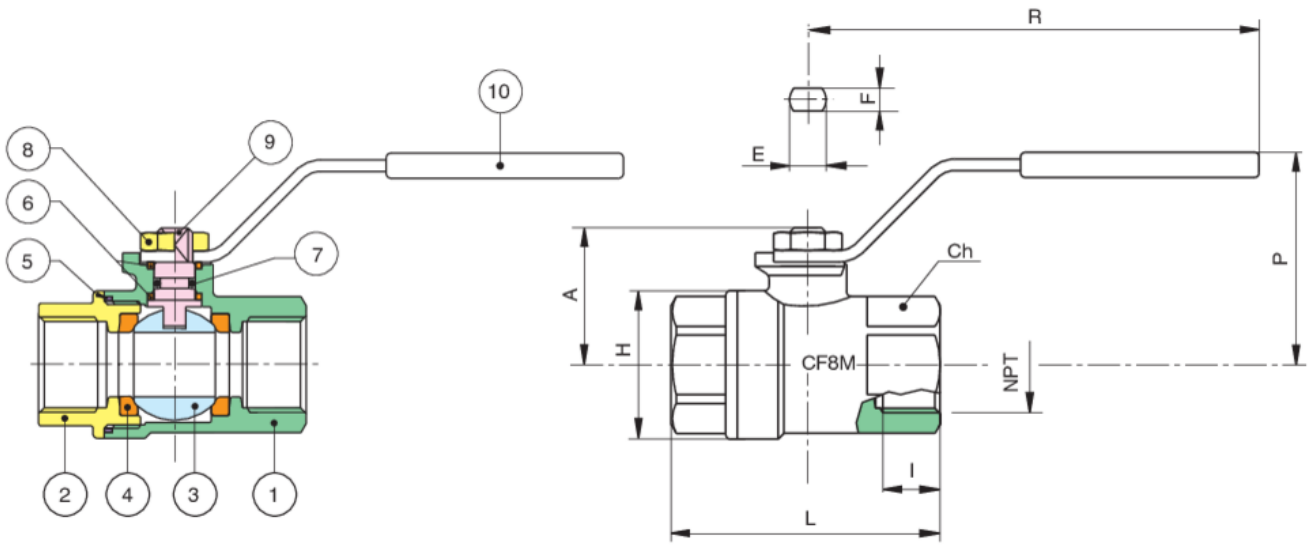

POSITION	PART NAME	MATERIAL	N.° PIECES
1	BODY	A351-CF8M	1
2	END CONNECTION	A351-CF8M	1
3	BALL	A479-TP316/A351-CF8M	1
4	BALL SEAT	PTFE	2
5	BODY SEAT	PTFE	1
6	THRUST WASHER	PTFE	2
7	O-RING	FKM	1
8	NUT	A182-F304	1
9	STEM	A479-TP316/17-4-PH	1
10	HANDLE	INOX AISI 430	1

SIZE	DN	I	L	H	CH	R	P	A	E	F	BOX	KV	PN	KG
1/4"	8	10	53,5	30	ES.22	110	44	28	8	5	15	5,5	64	0,22
3/8"	10	10	53,5	30	ES.22	110	44	28	8	5	15	8,5	64	0,20
1/2"	15	13	60	35	ES.27	110	47	30,5	8	5	10	19,2	64	0,25
3/4"	20	14	70	42,5	ES.32	131	54	37	10	7	15	35	40	0,45
1"	25	17	79	52	OT.41	131	58	41	10	7	5	64,5	40	0,85
1"1/4	32	19	91	62	OT.50	174	70	50	12	8	2	103,8	25	1,20
1"1/2	40	19,5	103	75	OT.55	174	76	57	12	8	2	174	25	1,80
2"	50	22,5	124	95	OT.70	174	86	66	12	8	2	301,3	25	2,70