

700328

Full bore stainless steel AISI 316-CF8M ball valve, F/F threading, ISO 5211, direct mount pad Antistatic Device.

NPT B.1.20.1 F/F.

Technical specifications

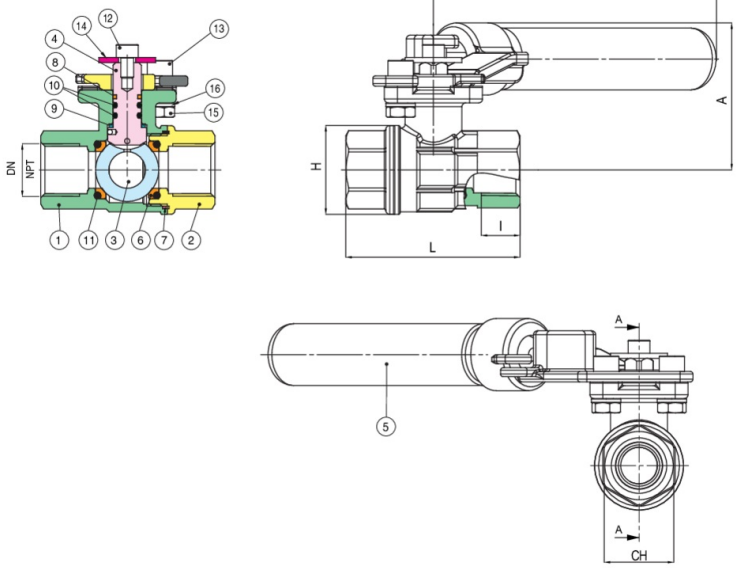

Temperature range: -20°C +160°C.
Vacuum: 10^{-2} torr.

POSITION	PART NAME	MATERIAL	N.° PIECES
1	BODY	A351-CF8M	1
2	END CONNECTION	A351-CF8M	1
3	BALL	A351-CF8M	1
4	ANTISTATIC STEM	A479-TP316	1
5	HANDLE	A351-CF8	1
6	BALL SEAT	PTFE VERGINE	2
7	BODY SEAT	PTFE	1
8	STEM SEAT	PTFE	1
9	ANTIFRICTION RING	TFM	1
10	O-RING	FKM	2
11	O-RING	FKM	2
12	SCREW	A2-70	1
13	SCREW	A2-70	2
14	WASHER	AISI 304	1
15	NUT	A2-70	2
16	WASHER	AISI 304	2

SIZE	DN	CODE	BOX	I	L	H	CH	A	C	E	ØN	B	Z	KV	PN	KG
1/2"	15	70032804	10	15	67	34,5	ES.27	41,5	9	9	36	6	38	19,2	64	0,32
3/4"	20	70032805	6	16,3	78	42	ES.32	43,5	9	9	36	6	38	35	64	0,42
1"	25	70032806	5	19,1	90	51,5	ES.41	53,5	9	9	36	6	38	64,5	64	0,73
1"1/4	32	70032807	2	21,4	100	64,5	OT.50	57	9	9	36	6	38	103,8	64	1,08
1"1/2	40	70032808	2	21,4	112	77	OT.55	74	11	11	50	7	50	174	64	1,72
2"	50	70032810	3	25,7	135	97	OT.70	83,3	11	11	50	7	50	301,3	64	3,00

Certifications

ATEX

SIL 3