ELECTRIC ON/OFF GLOBE VALVES
EV15
(EN)

DESCRIPTION

The ADCATrol EV15 is a series of single seated, two-way electric on/off globe valves with electric actuator. These valves are suitable for use with the most common process fluids such as steam, water, superheated water, air, neutral gases and oils.



MAIN FEATURES

Easy to service.
Compact and cost-effective.
Ambient temperature from -10 to 60 ºC (others on request).
24 V AC, 115 V AC, 230 V AC, 400 V AC 50/60 Hz and 24 V DC supply voltages.
Manual operation with disengagement of the actuator motor.
Valve protection against excessive force due to load-dependent seating.
Defined closing force at the end positions leading to tight valve shutoff.
Mechanical stroke indication via anti-rotation bar.

OPTIONS AND ACCESSORIES: Limit switches.
Heating resistor.



USE: Saturated steam.
Hot and superheated water.
Air, gases and others.

AVAILABLE MODELS: EV15G – SG iron.
EV15S – carbon steel.
EV15i – stainless steel.

SIZES: DN 15 to DN 200.

CONNECTIONS: EV15G – Flanged EN 1092-2 PN 16.
EV15S and EV15i – Flanged EN 1092-1 PN 16 or PN 40.
Standard PN 16 DN 65 flanges are supplied with 4 holes. 8 holes, according to EN 1092-1/-2, on request.

CE MARKING – GROUP 2 (PED – EUROPEAN DIRECTIVE)		
PN 16	**PN 40**	**CATEGORY**
DN 15 to 50	DN 15 to 32	SEP
DN 65 to 200	DN 40 to 100	1 (CE marked)
–	DN 125 to 200	2 (CE marked)

We reserve the right to change the design and material of this product without notice.

BODY LIMITING CONDITIONS

EV15G **		EV15S *				EV15i *			
FLANGED PN 16		FLANGED PN 16		FLANGED PN 40		FLANGED PN 16		FLANGED PN 40	
ALL. PRES.	REL. TEMP.	ALL. PRES.	REL. TEMP.	ALL. PRES.	REL. TEMP.	ALL. PRES.	REL. TEMP.	ALL. PRES.	REL. TEMP.
16 bar	-10 / 50 ºC	16 bar	-10 / 50 ºC	40 bar	-10 / 50 ºC	16 bar	-10 / 50 ºC	40 bar	-10 / 50 ºC
14,7 bar	200 ºC	13,3 bar	200 ºC	33,3 bar	200 ºC	13,4 bar	200 ºC	33,7 bar	200 ºC
13,9 bar	250 ºC	12,1 bar	250 ºC	27,6 bar	300 ºC	12,7 bar	250 ºC	29,7 bar	300 ºC
12,8 bar	300 ºC	11 bar	300 ºC	25,7 bar	350 ºC	11,8 bar	300 ºC	28,5 bar	350 ºC
11,2 bar	350 ºC	10,2 bar	350 ºC	23,8 bar	400 ºC	11,4 bar	350 ºC	27,4 bar	400 ºC

* Rating according to EN 1092-1:2018; ** Rating according to EN 1092-2:2007.

BONNET DESIGN

STANDARD	EXTENDED
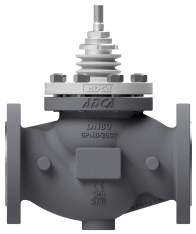	
-10 ºC to 250 ºC	Above 250 ºC

STEM SEALING

PTFE/GR V-RINGS (V1.2)	PTFE V-RINGS (V2.2)	EPDM (EP1)	GRAPHITE (G1)	BELLOWS	
				(BV1)	(BG1)
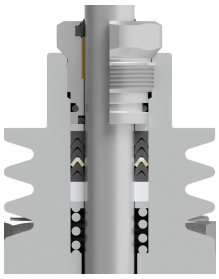	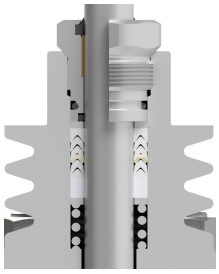	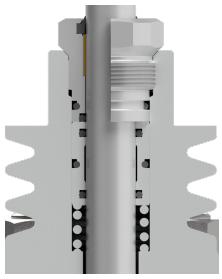	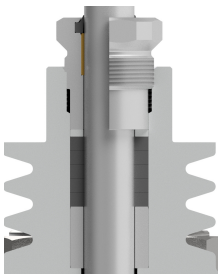	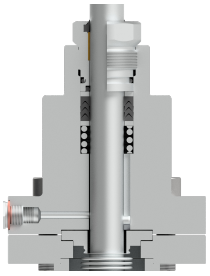	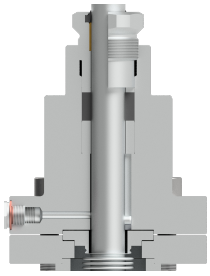
-10 to 220 ºC	-10 to 180 ºC	-10 to 150 ºC *	-10 to 400 ºC	- 60 to 220 ºC **	- 60 to 400 ºC **

* Up to 180 ºC in steam and hot water applications; ** Maximum operating pressure: 25 bar.

PLUG DESIGN

PARABOLIC	PARABOLIC (SOFT SEALING)
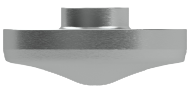	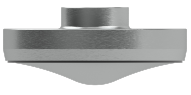
Sealing: Metal to metal **Characteristic:** Quick-opening (On/Off) **Flow direction:** From below **Leakage:** Class V, acc. to IEC 60534-4	**Sealing:** PTFE/GR **Characteristic:** Quick-opening (On/Off) **Flow direction:** From below **Leakage:** Class VI, acc. to IEC 60534-4 **Max. temp.:** 200 ºC

FLOW RATE COEFFICIENTS (m^3/h)

SIZES	DN 15	DN 20	DN 25	DN 32	DN 40	DN 50	DN 65	DN 80	DN 100	DN 125	DN 150	DN 200
Kvs	5,1	6,3	10	16	25	40	63	100	160	240	370	630
SEAT Ø (mm)	19,2	19,2	25	32	38	48	65	76	96	125	150	200
STROKE (mm)	5	8	8	10	10	12,5	20	20	25	32	38	50

For conversion Kvs = Cv (US) x 0,865.

We reserve the right to change the design and material of this product without notice.

EV15 – FTO, UNBALANCED TRIM

VALVE SIZE	ACTUATOR MODEL	MAXIMUM PERMISSIBLE PRESSURE DROP (bar) *			
		SOFT SEALING (CLASS VI)		METAL SEALING (CLASS V)	
		PTFE	GRAPHITE	PTFE	GRAPHITE
DN 15	EL12	40	40	40	35,1
	EL20	40	40	40	40
DN 20	EL12	40	40	23,2	19,6
	EL20	40	40	40	40
DN 25	EL12	17,8	15,7	12,2	10,1
	EL20	30,8	28,8	25,2	23,1
	EL45	40	40	40	40
DN 32	EL12	10,7	9,5	6,3	5,1
	EL20	18,7	17,4	14,3	13
	EL45	40	40	39,2	37,9
DN 40	EL12	7,5	6,6	3,8	2,9
	EL20	13,2	12,3	9,5	8,6
	EL45	30,8	29,9	27,1	26,2
	EL80	40	40	40	40
DN 50	EL20	8,2	7,6	5,2	4,7
	EL45	19,2	18,7	16,3	15,7
	EL80	40	40	40	40
DN 65	EL20	4,4	4,1	2,2	1,9
	EL45	10,4	10,1	8,2	7,9
	EL80	18,8	18,5	16,7	16,4
	EL120	28,5	28,2	26,3	26
DN 65 M16x1,5	SA07.2	31,6	31,1	29,4	28,9
	SA07.6	40	40	40	40
	EL250	40	40	40	40
DN80	EL45	7,6	7,4	5,7	5,5
	EL80	13,7	13,5	11,9	11,7
	EL120	20,8	20,6	19	18,7
DN 80 M16x1,5	SA07.2	23	22,7	21,2	20,9
	SA07.6	36,6	36,3	34,8	34,4
	EL250	40	40	40	40
	SA10.2	40	40	40	40
DN 100	EL45	4,7	4,6	3,2	3,1
	EL80	8,6	8,4	7,1	7
	EL120	13	12,9	11,5	11,4
DN 100 M16x1,5	SA07.2	14,4	14,2	12,9	12,7
	SA07.6	22,9	22,7	21,4	21,2
	EL250	27,3	27,1	25,9	25,7
	SA10.2	34,6	34,4	33,2	32,9
DN 125	EL80	5	4,9	3,9	3,8
	EL120	7,6	7,5	6,5	6,4
	SA07.2	8,5	8,3	7,3	7,2
	SA07.6	13,5	13,4	12,4	12,2
	EL250	16,1	16	15	14,8
	SA10.2	25	24,8	23,8	23,7
DN 150	EL80	3,5	3,4	2,5	2,4
	EL120	5,3	5,2	4,3	4,2
	SA07.2	5,9	5,8	4,9	4,8
	SA07.6	9,3	9,3	8,4	8,3
	EL250	11,1	11,1	10,2	10,1
	SA10.2	17,3	17,2	16,4	16,3
DN 200	SA07.2	3,3	3,2	2,5	2,5
	SA07.6	5,2	5,1	4,5	4,4
	EL250	6,2	6,2	5,5	5,4
	SA10.2	10,6	10,5	9,9	9,8
	SA14.2	20,2	20,2	19,5	19,5

* “PTFE” specified pressure drops are applicable in case of V-ring and O-ring stem seals independently of the material.
“GRAPH.” specified pressure drops are applicable in case of graphite and bellow stem seals.

We reserve the right to change the design and material of this product without notice.

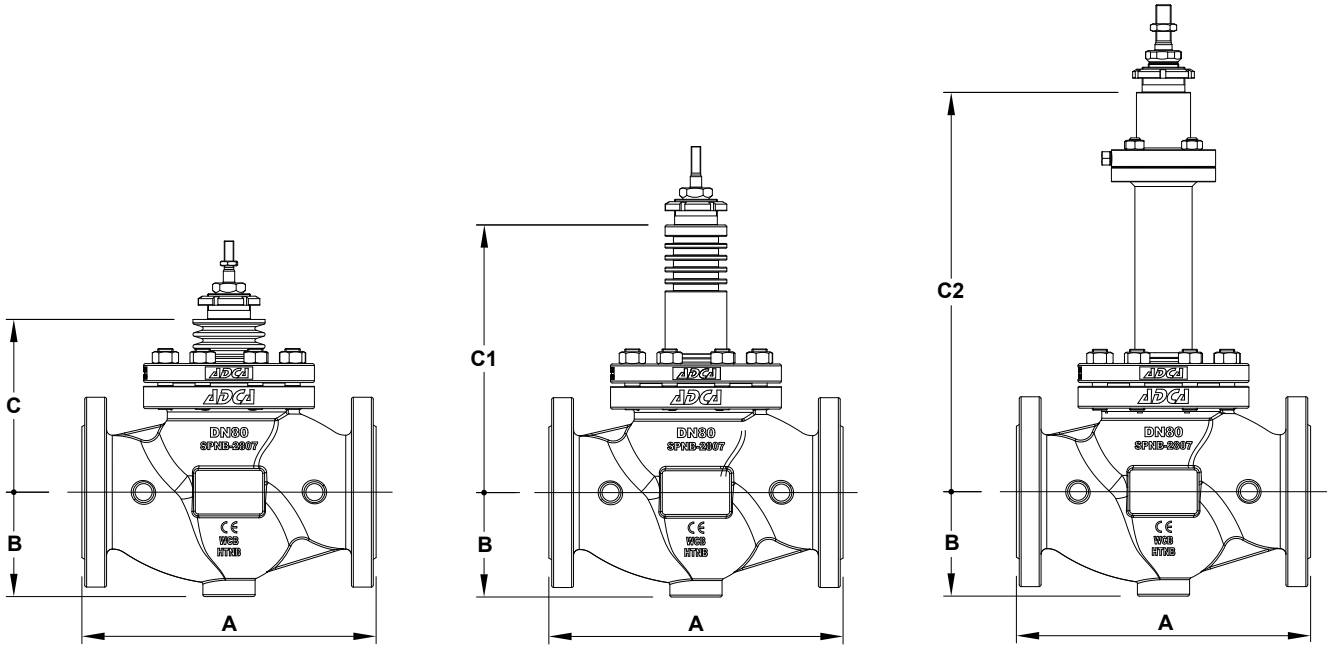

Valve with standard bonnet *Valve with extended bonnet* *Bellows sealed valve*

DIMENSIONS (mm)												
DIMENSION	**SIZE**											
	DN 15	**DN 20**	**DN 25**	**DN 32**	**DN 40**	**DN 50**	**DN 65**	**DN 80**	**DN 100**	**DN 125**	**DN 150**	**DN 200**
A	130	150	160	180	200	230	290	310	350	400	480	600
B	52	53	58	70	75	85	100	110	130	160	180	225
C	104	104	109	109	113	125	176	182	194	210	216	277
C1	169	169	189	189	193	204	276	282	314	315	320	400
C2	295	295	298	298	303	303	415	421	424	590	590	–

Remark: Standard PN 16 DN 65 flanges are supplied with 4 holes. 8 holes, according to EN 1092-1/-2, on request.

WEIGHTS (kg)												
	SIZE											
	DN 15	**DN 20**	**DN 25**	**DN 32**	**DN 40**	**DN 50**	**DN 65**	**DN 80**	**DN 100**	**DN 125**	**DN 150**	**DN 200**
STANDARD	5,1	6	6,9	10	12,6	16,4	31,8	38,2	48,9	79,1	105,5	232,3
EXTENDED	5,8	6,7	7,6	10,9	13,9	17,6	32,5	38,9	49,4	81,5	107,3	237,6
BELLOWS	9,3	10,2	10,9	14,1	16,6	20,2	35,6	41,9	53,5	85,9	112,3	–

We reserve the right to change the design and material of this product without notice.

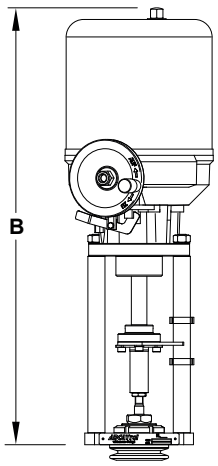

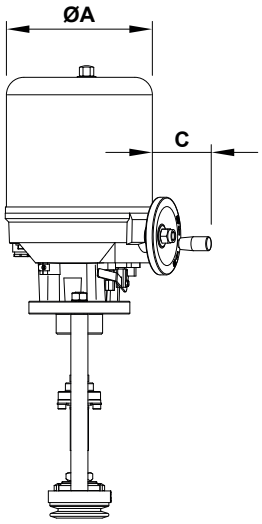

DIMENSIONS – EL SERIES ELECTRIC ACTUATORS (mm)						
DIMENSION	**EL12**	**EL20**	**EL45**	**EL80**	**EL120**	**EL250**
ØA	129	148	148	188	188	216
B	315	474	474	572	572	668
C	–	42	42	70	70	70
WEIGHT (kg)	2,1	8	8	13	13	19

For more information, please consult IS EL.012 – Linear electric actuators.

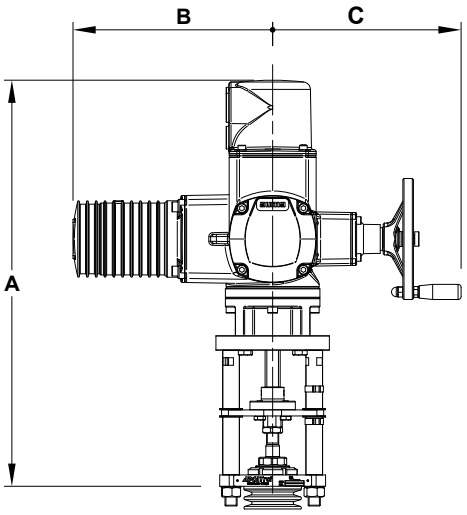

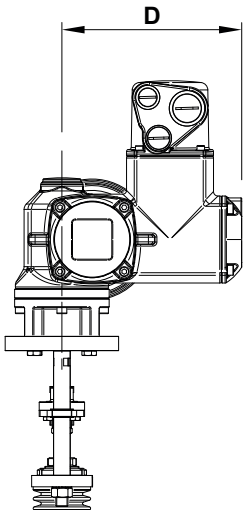

DIMENSIONS – SA SERIES ELECTRIC ACTUATORS (mm)				
DIMENSION	**SA07.2**	**SA07.6**	**SA10.2**	**SA14.2**
A	539 **(a)** 548 **(b)** 583 **(c)**	539 **(a)** 548 **(b)** 583 **(c)**	583 **(a)** 539 **(b)** 548 **(c)**	679
B	283	283	283	389
C	254	254	254	336
D	248	248	248	286
WEIGHT (kg)	25,4 **(a)** 26,8 **(b)** 32 **(c)**	27,9 **(a)** 31,2 **(b)** 33,1 **(c)**	30 **(a)** 33,2 **(b)** 35,2 **(c)**	65,2

(a) DN 65 to 100; **(b)** DN 125 to 150; **(c)** DN 200.
For more information, please consult the manufacturer.

We reserve the right to change the design and material of this product without notice.

MATERIALS

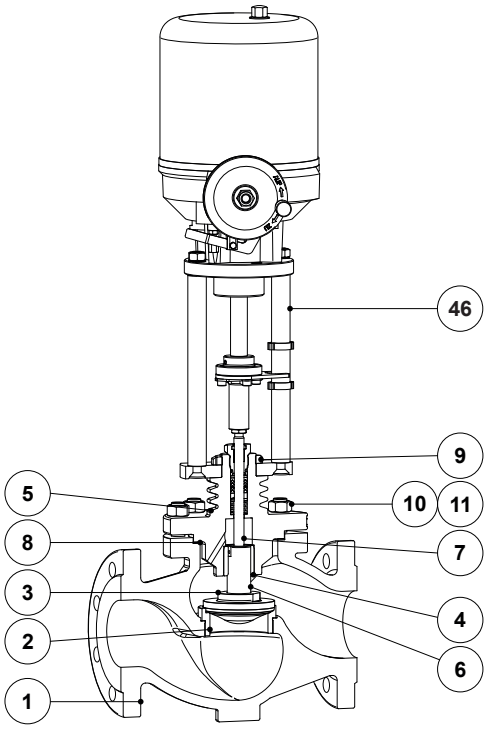

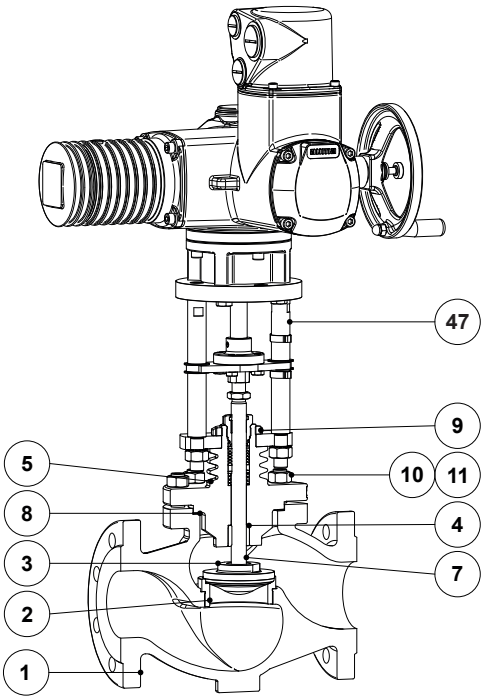

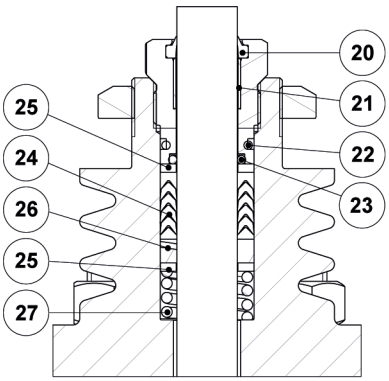

PTFE/GR V-Rings
(V1.2)

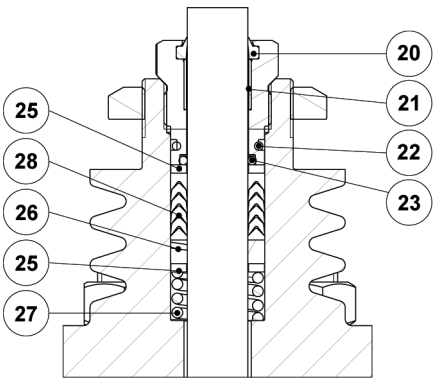

PTFE V-Rings
(V2.2)

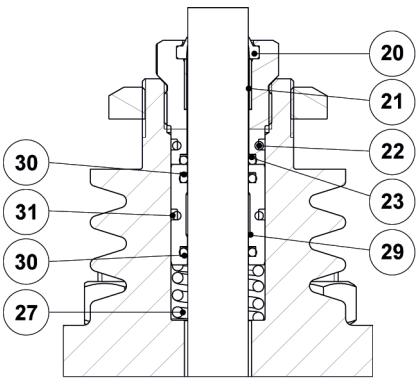

EPDM
(EP1)

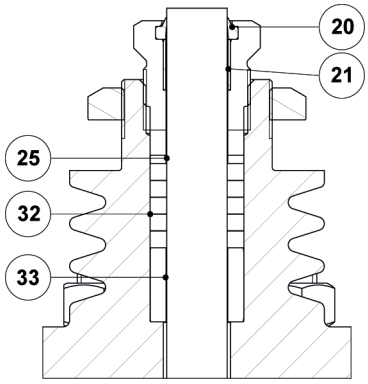

Graphite
(G1)

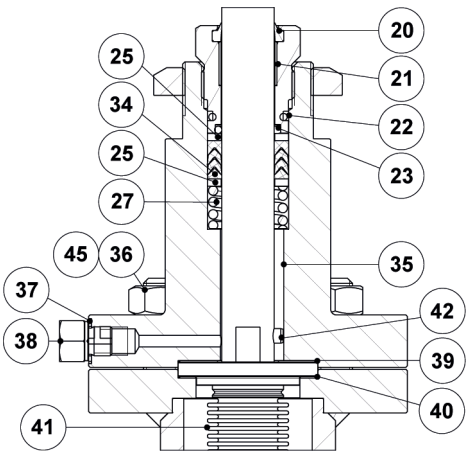

Bellows sealing
(BV1)

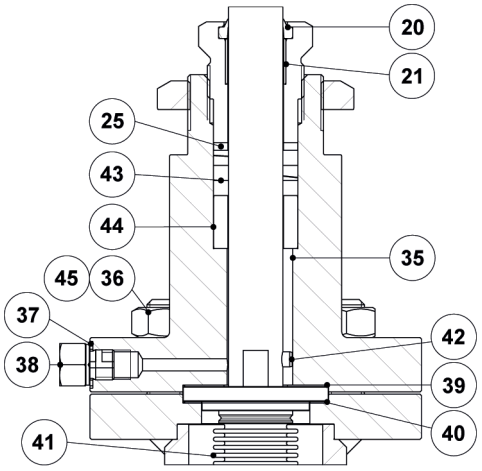

Bellows sealing
(BG1)

We reserve the right to change the design and material of this product without notice.

MATERIALS		
POS. No.	**DESIGNATION**	**MATERIAL**
1	Valve body (EV15G)	GJS-400-15 / 0.7040
	Valve body (EV15S)	A216 WCB / 1.0619
	Valve body (EV15i)	A351 CF8M / 1.4408
2	* Seat	AISI 316L / 1.4404
3	* Valve plug	AISI 316L / 1.4404
4	Stem guide	** Bronze CB1
5	Bonnet (EV15G and EV15S)	A351 CF8M / 1.4408; A216 WCB / 1.0619
	Bonnet (EV15i)	A351 CF8M / 1.4408
6	* Post stem (DN 65 to DN 100)	AISI 316L / 1.4404
7	* Stem	AISI 316L / 1.4404
8	* Gasket	Stainless steel / Graphite
9	Lock nut	A351 CF8 / 1.4308
10	Nut (EV15G and EV15S)	EN 10269 steel
	Nut (EV15i)	Stainless steel A2-70
11	Stud (EV15G and EV15S)	EN 10269 steel
	Stud (EV15i)	Stainless steel A2-70
12	* Packing nut	AISI 303 / 1.4305
13	Lock nut	AISI 304 / 4.4301
20	* Scraper ring	FPM; NBR
21	* Plain bearing	Bronze / PTFE
22	* O-ring	EPDM
23	* O-ring	FPM
24	* Chevron packing set	PTFE; Graphite filled PTFE
25	Washer	AISI 304 / 1.4301
26	* Stem guide	Stainless steel filled PTFE
27	* Spring	AISI 302 / 1.4310
28	* Chevron packing set	PTFE
29	O-ring guide	AISI 304 / 1.4301
30	* O-ring	EPDM
31	* O-ring	EPDM
32	* Packing set	Expanded graphite
33	Packing spacer	AISI 304 / 1.4301
34	* Safety packing set	Graphite filled PTFE
35	Bellows bonnet (EV15G and EV15S)	A105 / 1.0432; AISI 316 / 1.4401
	Bellows bonnet (EV15i)	AISI 316 / 1.4401
36	Stud (EV15G and EV15S)	EN 10269 steel
	Stud (EV15i)	Stainless steel A2-70
37	Gasket	Copper
38	Compression fitting	AISI 316 / 1.4401
39	* Gasket	Stainless steel / Graphite
40	* Gasket	Stainless steel / Graphite
41	* Metal bellows	AISI 316Ti / 1.4571
42	* Locking pin	AISI 303 / 1.4305
43	* Safety packing set	Expanded graphite
44	Packing spacer	AISI 304 / 1.4301
45	Nut (EV15G and EV15S)	EN 10269 steel
	Nut (EV15i)	Stainless steel A2-70
46	EL Linear electric actuator	See IS EL.012 – Linear electric actuators
47	SA Linear electric actuator	Consult manufacturer

* Available spare parts; ** Others on request.

We reserve the right to change the design and material of this product without notice.

ORDERING CODES EV15

VALVE MODEL	E15	1	G	U	1	2	012	1	X	L	015	
EV15 – Electric on/off globe valve, two-way, straight body	**E15**											
VALVE SERIES												
Series 1 (DN 15 to DN 100)		**1**										
Series 2 (DN 65 to DN 100 / M16x1,5; DN 125 to DN 200)		**2**										
BODY MATERIAL												
GJS-400-15 / 0.7040 SG iron			**G**									
A216 WCB / 1.0619 carbon steel			**S**									
A351 CF8M / 1.4408 stainless steel			**I**									
FLOW DIRECTION												
Flow under the plug				**U**								
STEM SEALING												
PTFE/GR V-Rings (V1.2)					**1**							
Virgin PTFE V-Rings (V2.2)					**2**							
Graphite (G1)					**3**							
EPDM (EP1)					**4**							
Graphite (G1) with extended bonnet					**6**							
Stainless steel bellows with PTFE/GR safety packing (BV1)					**8**							
Stainless steel bellows with graphite safety packing (BG1)					**9**							
VALVE SEALING												
Metal to metal (Class V)						**2**						
Soft sealed with PTFE/GR (Class VI)						**3**						
ACTUATOR MODEL												
EL12							**012**					
EL20							**020**					
EL45							**040**					
EL45.1							**041**					
EL45.2							**042**					
EL80							**080**					
EL80.1							**081**					
EL80.2							**082**					
EL120							**120**					
EL120.1							**121**					
EL120.2							**122**					
EL250							**250**					
EL250.1							**251**					
EL250.2							**252**					
SA07.2							**072**					
SA07.6							**076**					
SA10.2							**102**					
SA14.2							**142**					
Without actuator **(a)**							**XXX**					
SUPPLY VOLTAGE												
230 V AC 50/60 Hz								**1**				
115 V AC 50/60 Hz								**2**				
24 V AC 50/60 Hz **(b)**								**3**				
24 V DC								**4**				
400 V AC 3 ~ 50/60 Hz								**5**				
Without actuator **(a)**								**X**				
LIMIT SWITCHES												
Without additional limit switches									**X**			
FG teletransmitter assembly with one additional WE limit switch **(b)**									**1**			
FG teletransmitter assembly with two additional WE limit switches **(b)**									**2**			
PIPE CONNECTIONS												
Flanged EN 1092-1/-2 PN 16										**L**		
Flanged EN 1092-1 PN 40										**N**		
SIZE												
DN 15											**015**	
DN 20											**020**	
...												
SPECIAL CONSTRUCTION / ADDITIONAL OPTIONS												
A full description must to be provided and validated in case of a non-standard construction												**E**

(a) Valve supplied without actuator. Actuator code must be specified separately e.g.: E151SU13XXXXXL050 fitted with ELS20X1C5XXXA1 actuator.
(b) Only available with EL actuators. SA actuators already include additional limit switches for monitorization purposes.
Remark: Options and accessories not mentioned in the ordering codes table must be requested separately, e.g.: E151GU130401XL040 fitted with HZ/WP heating resistor with thermoswitch.

We reserve the right to change the design and material of this product without notice.