T STRAINERS
IS40T
(EN)

DESCRIPTION

The ADCA IS40T cast steel T strainers are applicable in all types of steam, water, oil and air systems.
Their purpose is to protect traps, regulating valves, piping, etc. from dirt and impurities, which are often the cause of damage and consequent energy loss of fluid systems.





OPTIONS:	Other screen apertures. Drain plug or drain valve in strainer cap.
USE:	Saturated steam, water, oil, air and other fluids compatible with the construction materials.
AVAILABLE MODELS:	IS40TS – carbon steel. IS40Ti – stainless steel.
SIZES:	DN 15 to DN 100.
SCREENS:	0,5 mm aperture – DN15 to DN 25. 1,5 mm aperture – DN 32 to DN 80. 2 mm aperture – DN 100. Others on request.
CONNECTIONS:	Flanged EN 1092-1 PN 16, PN 25 or PN 40.
INSTALLATION:	Horizontal or vertical installation. See IMI – Installation and maintenance instructions.

CE MARKING – GROUP 2 (PED – EUROPEAN DIRECTIVE)			
PN 16	**PN 25**	**PN 40**	**CATEGORY**
DN 15 to 50	DN 15 to 40	DN 15 to 32	SEP
DN 65 to 100	DN 50 to 100	DN 40 to 100	1 (CE marked)

BODY LIMITING CONDITIONS *

IS40TS						IS40Ti	
PN 16		PN 25		PN 40		PN 40	
ALLOWABLE PRESSURE	RELATED TEMPERATURE	ALLOWABLE PRESSURE	RELATED TEMPERATURE	ALLOWABLE PRESSURE	RELATED TEMPERATURE	ALLOWABLE PRESSURE	RELATED TEMPERATURE
16 bar	-10 / 120 ºC	25 bar	-10 / 50 ºC	40 bar	-10 / 50 ºC	40 bar	-10 / 50 ºC
13,3 bar	200 ºC	20,8 bar	200 ºC	33,3 bar	200 ºC	33,7 bar	200 ºC
12,1 bar	250 ºC	19 bar	250 ºC	27,6 bar	300 ºC	29,7 bar	300 ºC
11 bar	300 ºC	17,2 bar	300 ºC	25,7 bar	350 ºC	28,5 bar	350 ºC
10,2 bar	350 ºC	16 bar	350 ºC	23,8 bar	400 ºC	27,4 bar	400 ºC

* Rating according to EN 1092-1:2018.

We reserve the right to change the design and material of this product without notice.

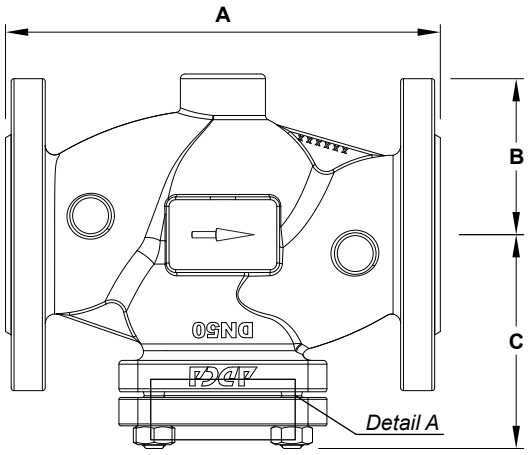

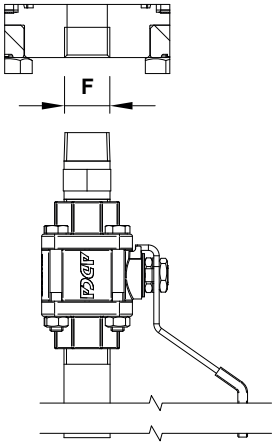

Detail A

DIMENSIONS (mm)					
SIZE	**A**	**B**	**C**	**F ***	**WEIGHT (kg)**
DN 15	130	48	80	1/2"	3,7
DN 20	150	53	80	1/2"	4,2
DN 25	160	58	87	1/2"	5,3
DN 32	180	70	100	1/2"	7,8
DN 40	200	75	105	1/2"	9,6
DN 50	230	83	115	1/2"	14
DN 65	290	93	155	1/2"	23,5
DN 80	310	100	155	1/2"	27,9
DN 100	350	118	165	1/2"	34,6

* Others on request.

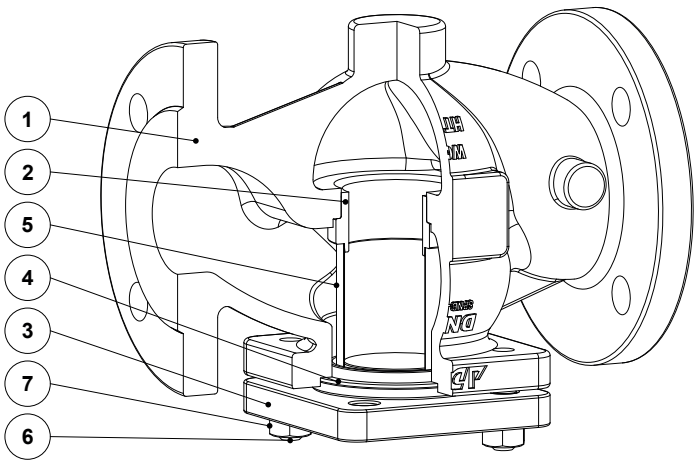

MATERIALS			
POS. No.	**DESIGNATION**	**IS40TS**	**IS40Ti**
1	Body	A216 WCB / 1.0619; GP240GH / 1.0619	A351 CF8M / 1.4408
2	Centering ring	AISI 304 / 1.4301	AISI 304 / 1.4301
3	Cover	AISI 304 / 1.4301	AISI 304 / 1.4301
4	* Gasket	Stainless steel / Graphite	Stainless steel / Graphite
5	* Strainer screen	AISI 304 / 1.4301	AISI 304 / 1.4301
6	Stud	EN 10269 steel	Stainless steel A2-70
7	Nut	EN 10269 steel	Stainless steel A2-70

* Available spare parts.

We reserve the right to change the design and material of this product without notice.