AIR AND GAS FLOAT TRAPS
FA35.3
(Carbon steel ; 11/2" and 2" – DN 40 and DN 50)

DESCRIPTION

The ADCA FA35.3 is a series of fully automatic ball float traps specially designed for condensate drainage in compressed air and gas systems.
Typical applications include aftercoolers, separators and compressed air mains.



MAIN FEATURES

Modulating discharge.
Unaffected by sudden or wide load and pressure variations.
Flow direction can be easily changed by repositioning the body in relation to the mechanism and cover.



OPTIONS: Equalizing (vent) and drain connections.
BDV – Blowdown valve.
AFZ – Anti-freeze device.
FLL – Float lifting lever.

USE: Compressed air and other non corrosive gases compatible with the construction.

AVAILABLE MODELS: FA35.3-4,5, FA35.3-10, FA35.3-14, FA35.3-21 and FA35.3-32 – carbon steel.

SIZES: 11/2" and 2"; DN 40 and DN 50.

CONNECTIONS: Female threaded ISO 7 Rp or NPT.
Flanged EN 1092-1 PN 40.
Flanged ASME B16.5 Class 150 or 300.
Socket weld (SW) ASME B16.11.

INSTALLATION: Horizontal or vertical installation.

ΔPMX: FA35.3-4,5 – 4,5 bar
FA35.3-10 – 10 bar
FA35.3-14 – 14 bar
FA35.3-21 – 21 bar
FA35.3-32 – 32 bar

CE MARKING – GROUP 2 (PED – EUROPEAN DIRECTIVE)		
CLASS 150	**PN 40**	**CATEGORY**
11/2" and 2" DN 40 and 50	–	SEP
–	11/2" and 2" DN 40 and 50	1 (CE marked)

BODY LIMITING CONDITIONS		
FLANGED PN 40 / CLASS 300 *	**FLANGED CLASS 150 ****	**RELATED TEMPERATURE**
ALLOWABLE PRESSURE	**ALLOWABLE PRESSURE**	
40 bar	17,7 bar	100 ºC
40 bar	14 bar	200 ºC
39 bar	12,1 bar	250 ºC
35,2 bar	10,2 bar	300 ºC

PMO – Maximum operating pressure: 32 bar; TMO – Maximum operating temperature: 250 ºC.
Minimum liquid specific weight: 0,75 kg/dm³.
* According to EN 1092-1:2018; ** According to EN 1759-1:2004.
Body limiting conditions PN 40 or below, depending on the type of connection adopted. Rating PN 40 for threaded, SW and BW versions.

We reserve the right to change the design and material of this product without notice.

FLOW RATE CAPACITY (kg/h)														
MODEL	SIZE	DIFFERENTIAL PRESSURE (bar)												
		0,5	1	1,5	2	4,5	7	10	12	14	16	21	25	32
FA35.3-4,5	11/2" and 2" – DN 40 and 50	995	1450	1710	2000	2990	–	–	–	–	–	–	–	–
FA35.3-10	11/2" and 2" – DN 40 and 50	505	720	850	1010	1600	1890	2300	–	–	–	–	–	–
FA35.3-14	11/2" and 2" – DN 40 and 50	370	520	610	735	1150	1430	1620	1750	1980	–	–	–	–
FA35.3-21	11/2" and 2" – DN 40 and 50	305	430	515	600	900	1160	1435	1590	1620	1760	1995	–	–
FA35.3-32	11/2" and 2" – DN 40 and 50	175	230	290	340	505	625	745	815	900	955	1125	1250	1480

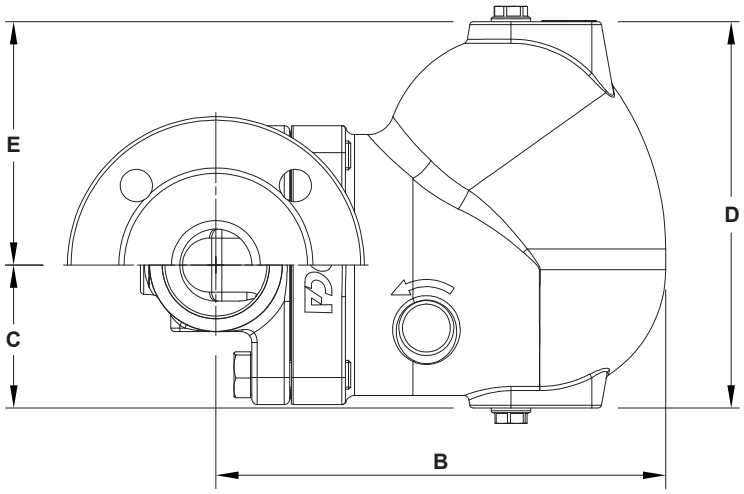

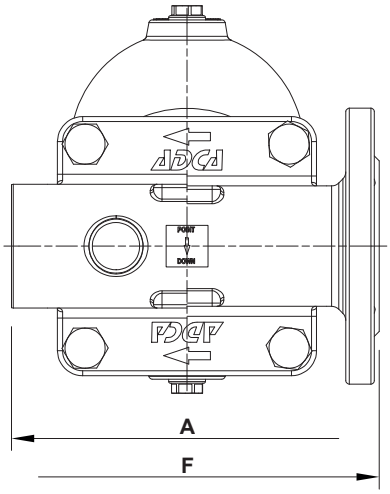

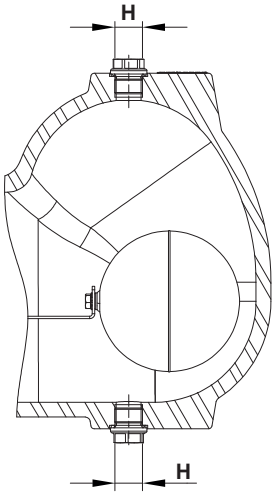

DIMENSIONS (mm)																
SIZE	THREADED / SW							PN 40			CLASS 150			CLASS 300		
	A	B	C	D	E	H *	WGT. (kg)	F	B	WGT. (kg)	F	B	WGT. (kg)	F	B	WGT. (kg)
11/2" – DN 40	210	250	80	215	136	3/8"	18,9	230	250	21,7	230	250	20,2	230	250	21,5
2" – DN 50	210	250	80	215	136	3/8"	18,2	230	250	23,6	230	250	21,5	230	250	23,2

* As standard, in versions with EN flanges and female ISO 7 Rp threads, these connections are female threaded ISO 228. In versions with ASME flanges, female NPT threads or SW, these connections are female threaded NPT.

We reserve the right to change the design and material of this product without notice.

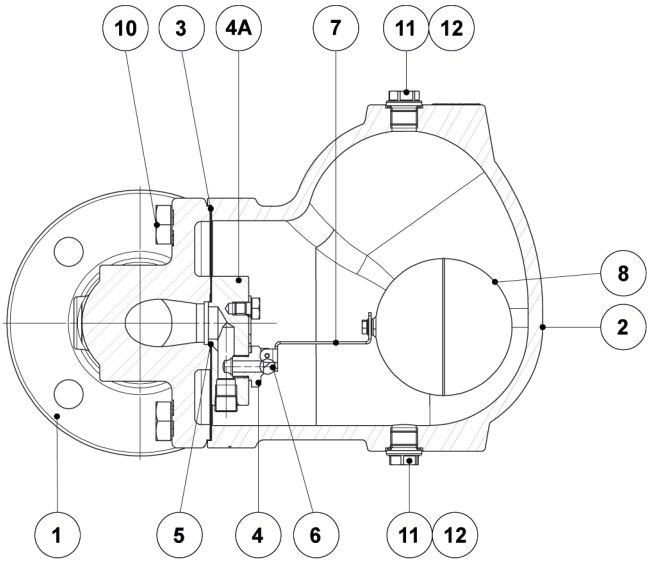

MATERIALS		
POS. No.	**DESIGNATION**	**MATERIAL**
1	Body	A216 WCB / 1.0619
2	Cover	A216 WCB / 1.0619
3	* Gasket	Stainless steel / Graphite
4	* Seat	AISI 410 / 1.4006
4A	Mounting plate	AISI 316 / 1.4401
5	* Gasket	Graphite
6	* Valve ball	AISI 440C / 1.4125
7	* Lever	AISI 304 / 1.4301
8	* Float	AISI 304 / 1.4301
10	Bolt	Zinc plated steel
11	Plug	AISI 316L / 1.4404
12	** Gasket	Copper; AISI 304 / 1.4301
31	Lever mechanism	AISI 303 / 1.4305; AISI 304 / 1.4301; AISI 316L / 1.4404
32	Packing	Graphite
33	Lever	Plastic
51	Blowdown valve	AISI 303 / 1.4305; AISI 316L / 1.4404
61	Anti-freeze device	AISI 303 / 1.4305; AISI 316L / 1.4404

* Available spare parts; ** Not applicable in NPT version.

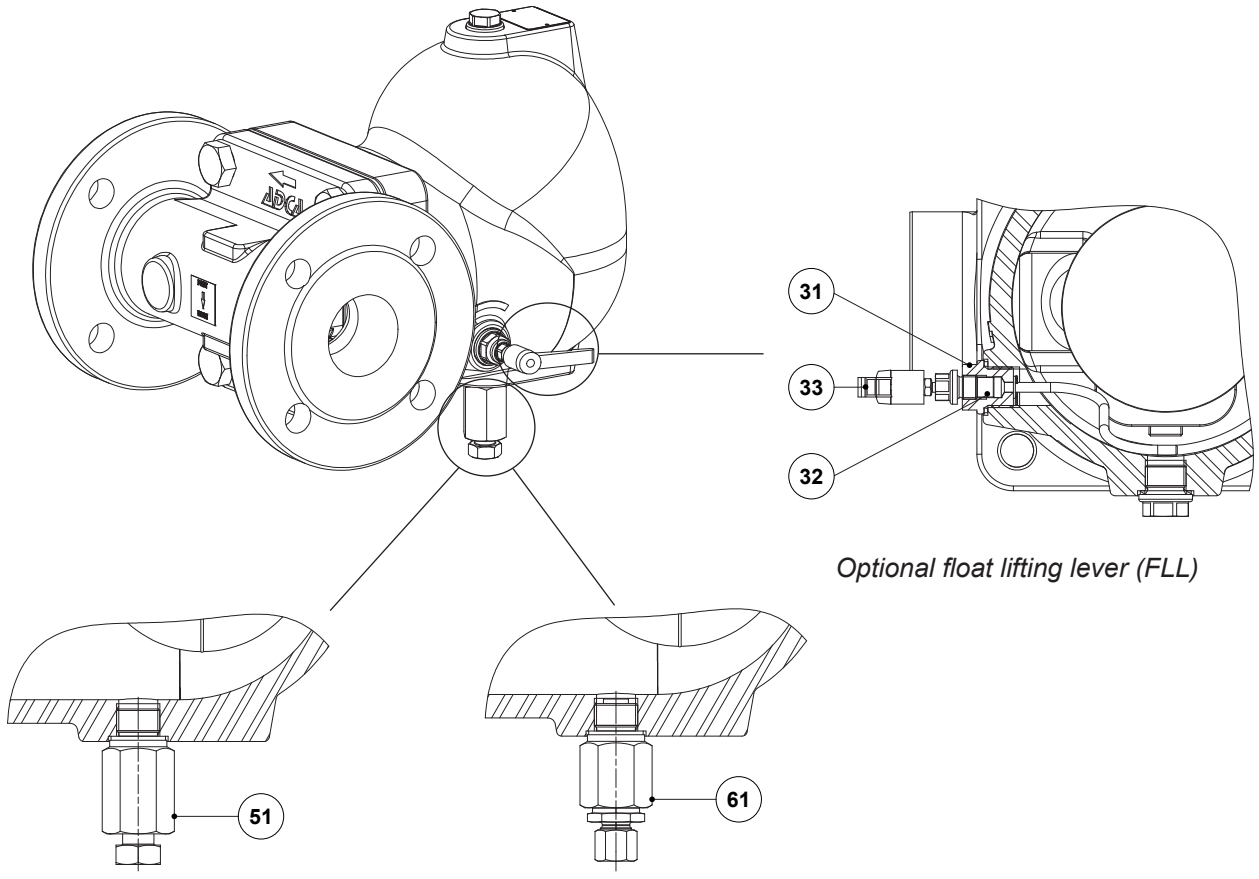

Optional float lifting lever (FLL)

Optional blowdown valve (BDV); Manual

Optional anti-freeze device (AFZ); Automatic

We reserve the right to change the design and material of this product without notice.

FLOW DIRECTION

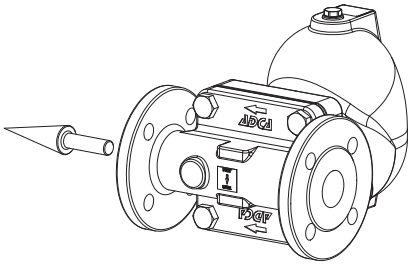

R – Horizontal from right to left

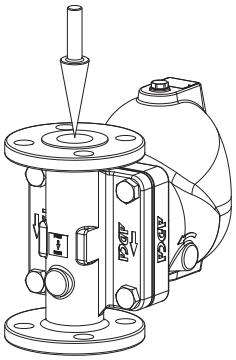

V – Vertical from top to bottom

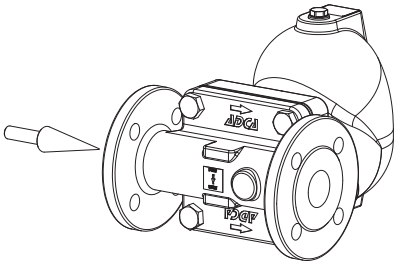

L – Horizontal from left to right

ORDERING CODES FA35.3									
MODEL	**FA353**	**2**	**M**	**XX**	**X**	**IR**	**A**	**40**	
FA35.3 – A216 WCB / 1.0619 carbon steel	**FA353**								
MAXIMUM ALLOWABLE DIFFERENTIAL PRESSURE (ΔPMX)									
4,5 bar		**2**							
10 bar		**3**							
14 bar		**4**							
21 bar		**5**							
32 bar		**7**							
VALVE SEALING									
Metal to metal			**M**						
COVER CONNECTIONS									
None				**XX**					
3/8" threaded connections on top and bottom, closed with plugs (mandatory if any options are considered)				**10**					
OPTIONS									
BDV and AFZ have specific separated ordering codes, please refer to the appropriate documentation									
FLL – FLOAT LIFTING LEVER									
None					**X**				
Lifting lever on the right side (when facing the steam trap body)					**R**				
Lifting lever on the left side (when facing the steam trap body)					**L**				
FLOW DIRECTION									
Horizontal from right to left (standard)						**IR**			
Horizontal from left to right						**IL**			
Vertical from top to bottom						**IT**			
PIPE CONNECTIONS									
Female threaded ISO 7 Rp							**A**		
Female threaded NPT							**C**		
Socket weld (SW) ASME B16.11							**H**		
Flanged EN 1092-1 PN 40							**N**		
Flanged ASME B16.5 Class 150							**U**		
Flanged ASME B16.5 Class 300							**V**		
SIZE									
11/2" or DN 40								**40**	
2" or DN 50								**50**	
SPECIAL CONSTRUCTION / ADDITIONAL OPTIONS									
A full description must to be provided and validated in case of a non-standard construction									**E**