HYGIENIC BALL VALVES
M3H
(6" – DN 150)

DESCRIPTION

The ADCAPure M3H three piece body ball valves are isolating valves designed for use with clean steam, condensate and other gases and liquids used in high purity and aseptic processes.
The valve is not designed as a control valve and should only be used as an isolating valve, fully open or fully closed.
The product is mainly designed for the pharmaceutical, biotech, semiconductor, cosmetics, fine chemical and food & beverage industries.



MAIN FEATURES

True or full bore floating ball design.
Can be serviced without removal from the pipeline.
Bidirectional.
Antistatic device.
Anti blow out proof stem.
ISO 5211 mounting.

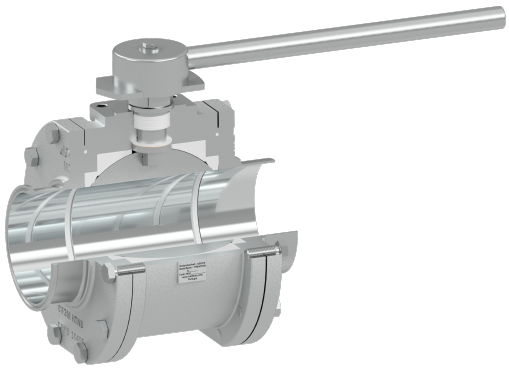

STANDARD SURFACE FINISH

Internal wetted parts: ≤ 0,51 µm Ra – SF1.
External: as casted.
Other surface conditions see TIS.GIA – General information ADCAPure.
Ultrasonic cleaning.

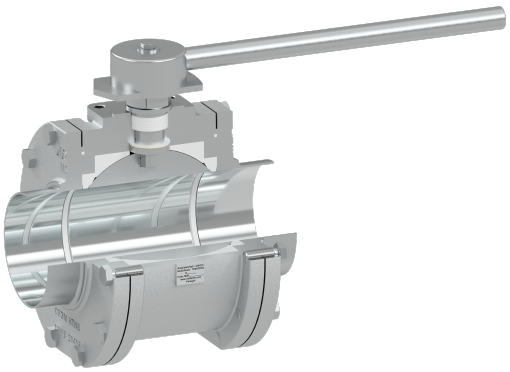

OPTIONS:	Tube weld with loose body flanges (360º rotation after installation). Different sealing materials. Degreased for oxygen use. Gearboxes. Cavity fillers. For more options and extras, consult IS M3H.100 – Sanitary Ball Valves Additional Options and Extras.
USE:	Clean steam, gases and liquids compatible with the construction.
AVAILABLE MODELS:	M3H – investment casting.
SIZES:	6"; DN 150.
CONNECTIONS:	ASME BPE, DIN or ISO clamp ferrules, tube weld (ETO) ends or a combination of both. Others on request.
PACKAGING:	Assembling and packaging in a clean room certified according to ISO 14644-1. The product is end capped and sealed with recyclable thermo-shrinkable plastic film, to avoid contamination.
INSTALLATION:	See IMI – Installation and maintenance instructions.

CE MARKING – GROUP 2 (PED – EUROPEAN DIRECTIVE)	
PN 16	**CATEGORY**
6" – DN 150	1 (CE marked)

We reserve the right to change the design and material of this product without notice.

PRESSURE / TEMPERATURE LIMITS

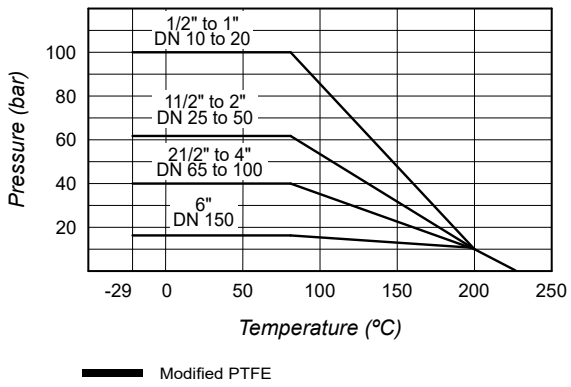

Remark: Maximum operating conditions may be limited by the valve end connections due to normative restrictions.

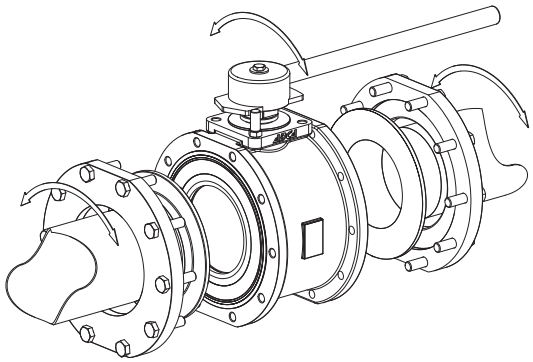

Tube weld easy and quick installation (on request)

Valves with tube weld (ETO) connections are fitted, as standard, with loose body flanges which allow installation with no need to align the end connections. After installation the valve can rotate freely 360º to the desired orientation.

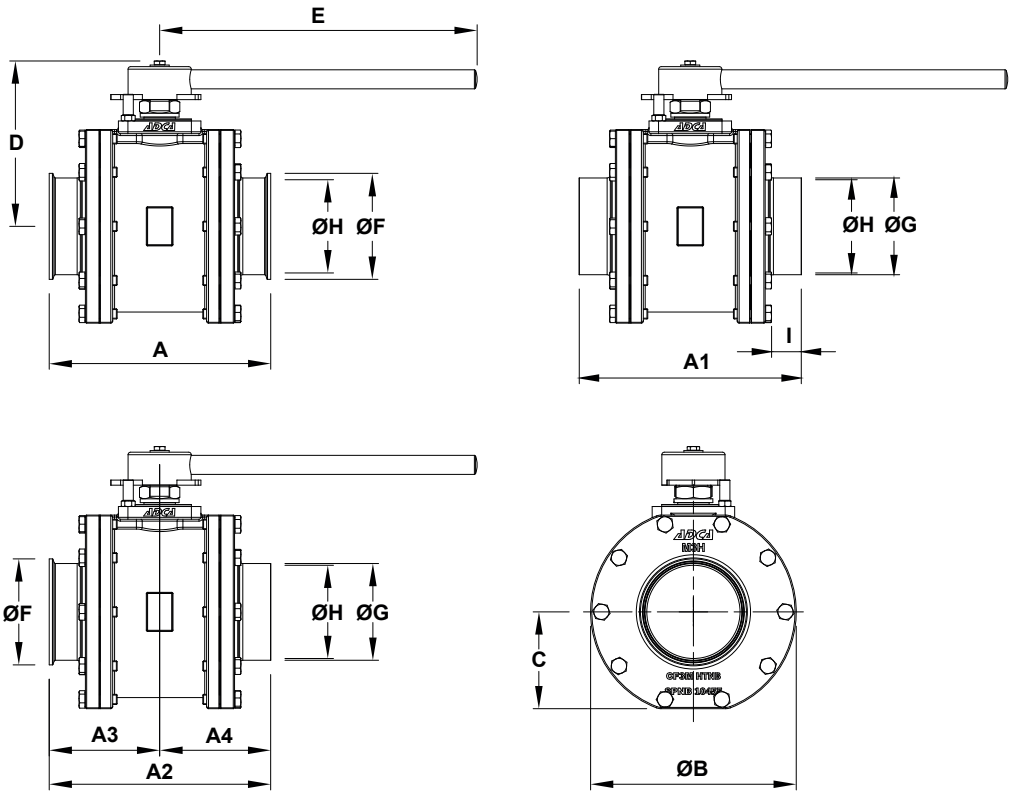

DIMENSIONS – ASME (mm)															
SIZE	**A**	**A1**	**A2**	**A3**	**A4**	**ØB**	**C**	**D**	**E**	**ØF**	**ØG**	**ØH**	**I**	**BALL PORT**	**ISO 5211**	**WGT. (kg)**
6"	350	350	350	175	175	324	153	260	500	167	152,4	146,9	48	147	F14	95

DIMENSIONS – DIN (mm)															
SIZE	**A**	**A1**	**A2**	**A3**	**A4**	**ØB**	**C**	**D**	**E**	**ØF**	**ØG**	**ØH**	**I**	**BALL PORT**	**ISO 5211**	**WGT. (kg)**
DN 150	350	350	350	175	175	324	153	260	500	183	154	150	48	147	F14	102

DIMENSIONS – ISO (mm)															
SIZE	**A**	**A1**	**A2**	**A3**	**A4**	**ØB**	**C**	**D**	**E**	**ØF**	**ØG**	**ØH**	**I**	**BALL PORT**	**ISO 5211**	**WGT. (kg)**
DN 150	350	350	350	175	175	324	153	260	500	183	168,3	163,1	48	147	F14	102

We reserve the right to change the design and material of this product without notice.

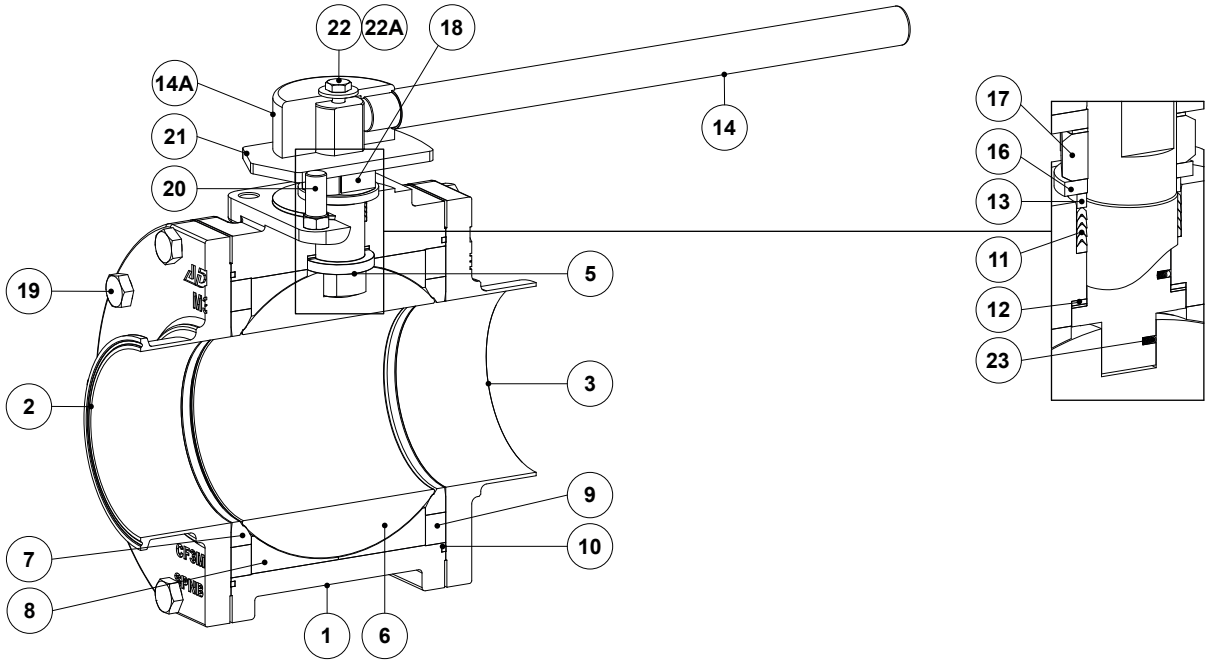

MATERIALS		
POS. No.	**DESIGNATION**	**MATERIAL**
1	Valve body	A351 CF3M / 1.4409
2	Clamp ferrule end connection	A351 CF3M / 1.4409
3	Tube weld end connection	A351 CF3M / 1.4409; AISI 316L / 1.4435
5	Stem	AISI 316L / 1.4404
6	* Valve ball	AISI 316L / 1.4404
7	* Standard seat	Modified PTFE
8	* Cavity filler seat	Modified PTFE
9	Body ring	AISI 316L / 1.4404
10	* Body seal	PTFE
11	* Stem seal	Modified PTFE
12	* Stem thrust seal	Modified PTFE; PEEK
13	* Spacer	AISI 316 / 1.4401
14	Handle	AISI 304 / 1.4301
14A	Handle body	AISI 304 / 1.4301
16	Spring washer	Stainless steel A2
17	Compression nut	AISI 304 / 1.4301
18	Lock washer	AISI 304 / 1.4301
19	Body fixing bolt	Stainless steel A2-70
20	Stop pin	AISI 304 / 1.4301
21	Handle stopper	AISI 304 / 1.4301
22	Handle fixing bolt	Stainless steel A2-70
22A	Washer	Stainless steel A2
23	Antistatic device	AISI 316 / 1.4401

* Available spare parts.
Remarks: FDA / USP Class VI seals certificate on request.
All valves have a serial number. In case of non-standard valves, this number must be supplied if spare parts are ordered.

We reserve the right to change the design and material of this product without notice.

ORDERING CODES M3H											
VALVE MODEL	**MH**	**1**	**X**	**X**	**F**	**X**	**X**	**CB**	**X**	**150**	
M3H – A351 CF3M / 1.4409 Three piece ball valve	**MH**										
LEVER HANDLE											
Round lever with complete stainless steel construction		**1**									
Bare stem		**9**									
MATERIAL											
A351 CF3M / 1.4409			**X**								
A351 CF3M / 1.4409 with end connections in AISI 316L / 1.4435 **(a)**			**G**								
SEAT DESIGN											
Standard seats				**X**							
Cavity fillers				**F**							
SEAT MATERIAL											
Modified PTFE					**F**						
SURFACE FINISH (b)											
Standard surface finish						**X**					
Electropolished internal wetted parts (SF5)						**E**					
SPECIAL FEATURES											
None							**X**				
Degreased for oxygen							**O**				
PIPE CONNECTIONS											
Clamp ferrule ASME BPE								**CB**			
Clamp ferrule DIN (DIN 32676-A)								**CD**			
Clamp ferrule ISO (DIN 32676-B)								**CI**			
Tube weld (ETO) according to ASME BPE								**TB**			
Tube weld (ETO) according to DIN 11866-A (DIN 11850-2)								**TD**			
Tube weld (ETO) according to DIN 11866-B (ISO 1127)								**TI**			
TC/ETO combination ASME BPE								**CTB**			
TC/ETO combination DIN 32676-A / DIN 11866-A								**CTD**			
TC/ETO combination DIN 32676-B / DIN 11866-B								**CTI**			
BALL PORT											
True bore (ASME BPE) or full bore (DIN and ISO)									**X**		
SIZE											
6" or DN 150										**150**	
SPECIAL CONSTRUCTION / ADDITIONAL OPTIONS											
Full description or additional codes have to be added in case of a non standard combination											**E**

(a) Only available with tube weld (ETO) ends.
(b) Consult TIS.GIA – General information ADCAPure – for further details and other surface finish options.

We reserve the right to change the design and material of this product without notice.