# PILOT OPERATED PRESSURE REDUCING VALVES
# PRV47 and PRS47

## DESCRIPTION

The ADCA PRV47 pilot operated pressure reducing valves are designed for use with steam, compressed air, nitrogen and other gases compatible with the construction materials.
The PRV47 can be installed in pressure reducing stations throughout all industries, and provide sensitive and accurate control even when inlet pressure fluctuations or relevant flow variations occur.





## MAIN FEATURES

Precise control of downstream pressures from 0,07 bar to 17 bar.
Robust steel or stainless steel construction.
Suitable for dead end conditions.
Guided piston and valve stem.
Hardened plug.

**OPTIONS:**
Soft sealing.
Low pressure diaphragm.
Dome-loading.
Top cap (adjustment screw with cover).
Bottom cover drain connection.
Stellited plug and seat.
Internal sensing line.

**USE:**
Saturated steam, compressed air, and other gases (Group 2) compatible with the construction (except oxygen).

**AVAILABLE MODELS:**
PRV47, PRV47E – steel versions for steam.
PRV47i, PRV47iE – stainless steel versions for steam (only available from DN 15 to DN 50).
PRV47G, PRV47GE – steel versions for compressed air and gases.
PRV47Gi, PRV47GiE – stainless steel versions for compressed air and gases.
Suffix E: Version with solenoid valve for remote closure.
PRS: All models above are available with an optional sustaining valve pilot, e.g. PRS47G.

**SIZES:**
1/2" to 2"; DN 15 to DN 50.

**CONNECTIONS:**
Female threaded ISO 7 Rp or NPT.
Flanged EN 1092-1 PN 40.
Flanged ASME B16.5 Class 150 or 300.
Socket weld (SW) ASME B16.11.

**INSTALLATION:**
Horizontal installation.
See IMI – Installation and maintenance instructions.
In steam applications, a “Y” strainer, humidity separator, and steam trap should be installed upstream of the valve.

| CE MARKING – GROUP 2 (PED – EUROPEAN DIRECTIVE) | | |
|---|---|---|
| **CLASS 150** | **PN 40** | **CATEGORY** |
| 1/2" to 2" | DN 15 to 32<br>1/2" to 11/4" | SEP |
| – | DN 40 and 50<br>11/2" and 2" | 1 (CE marked) |



We reserve the right to change the design and material of this product without notice.

| LIMITING CONDITIONS | | | |
|---|---|---|---|
| **MODEL** | **PRV47 and PRV47i** | **PRS47 and PRS47i** | **PRV47E, PRS47E, PRV47iE and PRS47iE** |
| Body design conditions | PN 40 | PN 40 | PN 40 |
| Maximum upstream pressure | 28 bar | 17 bar | 10 bar |
| Maximum downstream pressure | 17 bar | 17 bar | 10 bar |
| Minimum downstream pressure * | 0,35 bar | 0,35 bar | 0,35 bar |
| Maximum operating temperature ** | 250 ºC | 250 ºC | 180 ºC |
| Maximum reducing ratio | See capacity tables | | |
| Rangeability | 10:1 | 10:1 | 10:1 |
| Maximum hydraulic factory valve body test | 60 bar | 60 bar | 60 bar |

* 0,07 bar with low pressure diaphragm (limited to 7 bar maximum inlet pressure).
** See "Ordering Codes" table for restrictions.

| REGULATING RANGES | | | | |
|---|---|---|---|---|
| **SPRING COLOUR** | **GREEN W/ 1 DIAPHRAGM** | **BLUE W/ 1 DIAPHRAGM** | **RED W/ 2 DIAPHRAGMS** | **BLACK W/ 2 DIAPHRAGMS** |
| Regulating range | 0,07 to 0,5 bar * 0,35 to 2 bar | 1,5 to 5,5 bar | 3,5 to 8,5 bar | 7 to 17 bar |

* With low pressure diaphragm.

| OPTIONS | | | | |
|---|---|---|---|---|
| **LOW PRESSURE DIAPHRAGM** | **DOME-LOADING** | **TOP CAP** | **BOTTOM COVER DRAIN CONNECTION** | **INTERNAL SENSING LINE** |
|  |  |  |  |  |

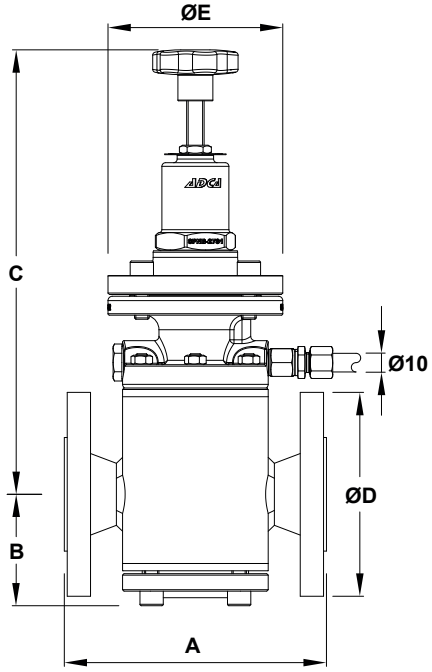


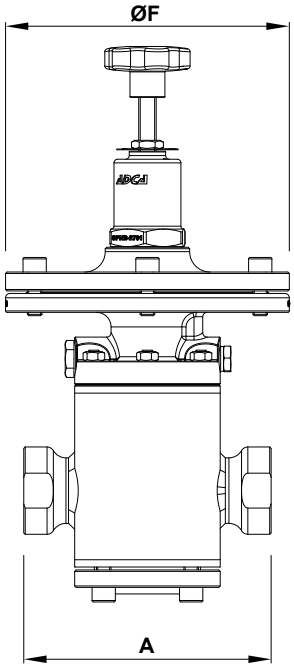


*Optional low pressure diaphragm*

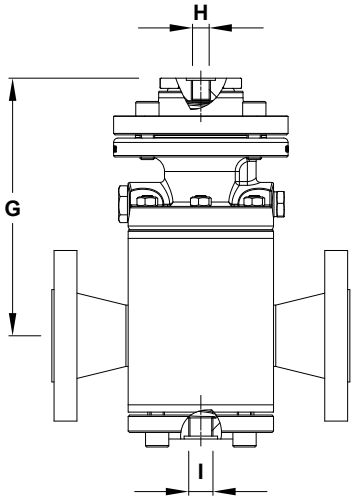


*Optional dome-loading and drain connection*

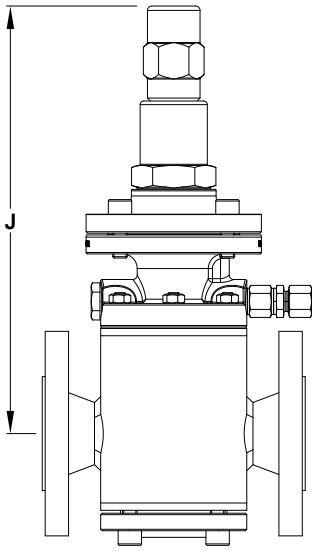


*Optional top cap*

| DIMENSIONS (mm) | | | | | | | | | | | | | | |
|---|---|---|---|---|---|---|---|---|---|---|---|---|---|---|
| SIZE | PN 40 | CLASS 150 | CLASS 300 | THREADED | B | C | ØD | ØE | ØF | G | H | I * | J | WGT. (kg) |
| | A | | | | | | | | | | | | | |
| 1/2" – DN 15 | 150 | 184 | 190 | 140 | 56 | 275 | 95 | 120 | 195 | 162 | 1/4" | 3/8" | 276 | 13 |
| 3/4" – DN 20 | 150 | 184 | 194 | 140 | 56 | 287 | 105 | 120 | 195 | 174 | 1/4" | 3/8" | 276 | 13,5 |
| 1" – DN 25 | 160 | 184 | 197 | 150 | 56 | 287 | 115 | 120 | 195 | 174 | 1/4" | 3/8" | 276 | 14 |
| 11/4" – DN 32 | 180 | – | – | 170 | 68 | 299 | 140 | 120 | 195 | 186 | 1/4" | 3/8" | 293 | 18 |
| 11/2" – DN 40 | 200 | 222 | 235 | 190 | 75 | 307 | 150 | 130 | 195 | 194 | 1/4" | 3/8" | 302 | 22 |
| 2" – DN 50 | 230 | 254 | 267 | 230 | 84 | 323 | 165 | 160 | 195 | 210 | 1/4" | 3/8" | 333 | 31 |

* Optional drain connection for steam trapping. This drain connection does not replace the humidity separator, but can be useful if, e.g., the valve stops operating for long periods of time.

Remarks: As standard, connections H and I, in valves manufactured with ASME B16.5 flanges, SW or NPT threads, are female threaded NPT. In valves manufactured with EN 1092-1 flanges or ISO 228 threads, these connections are also female threaded ISO 228.



We reserve the right to change the design and material of this product without notice.

## MATERIALS

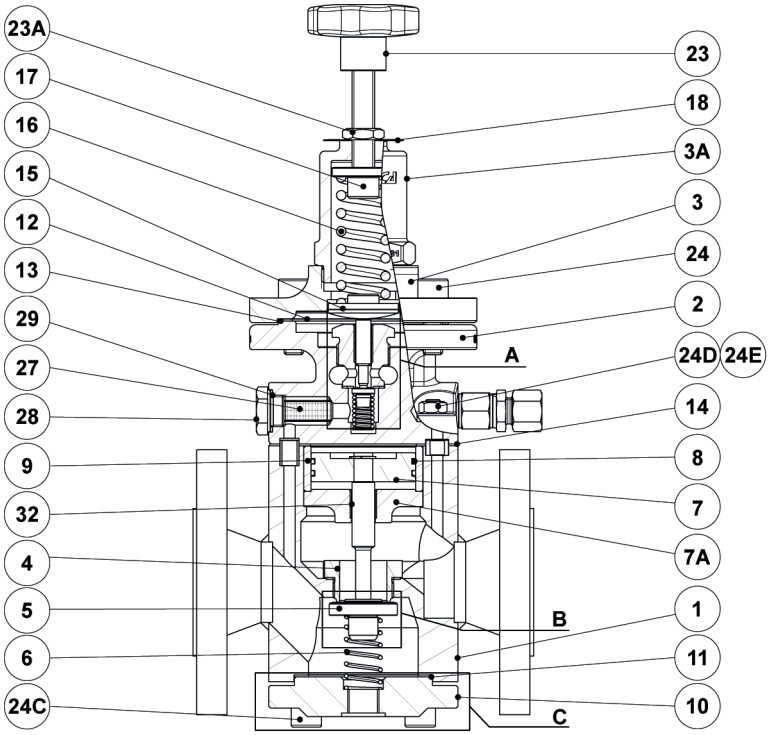


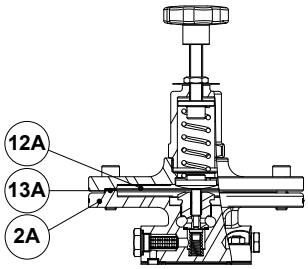


*Optional low pressure diaphragm*

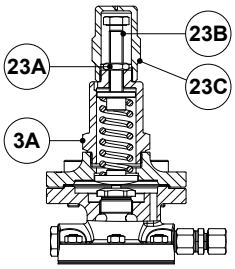


*Optional top cap*

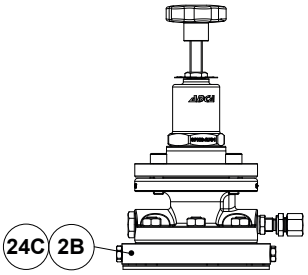


*Adapting flange (DN 50 and above)*

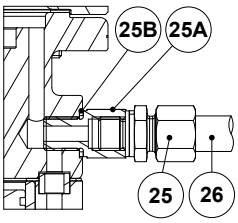


*External sensing line connection*

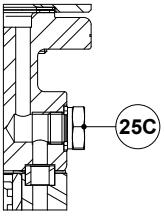


*Optional internal sensing line*

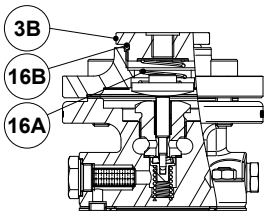


*Optional dome-loading*

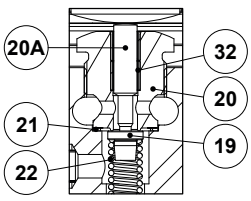


*Detail A*
*Pilot valve*

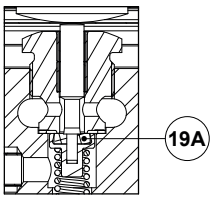


*Detail A*
*Pilot valve (soft)*

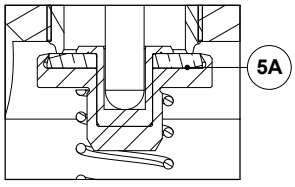


*Detail B*
*Main valve (soft)*

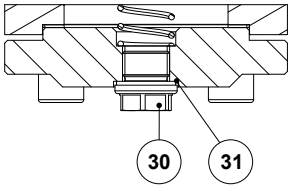


*Detail C*
*Optional drain connection*



We reserve the right to change the design and material of this product without notice.

| MATERIALS | | | |
|---|---|---|---|
| **POS. No.** | **DESIGNATION** | **PRV47** | **PRV47i** |
| **1** | Valve body | S355JR / 1.0045; P250GH / 1.0460 | AISI 316 / 1.4401 |
| **2** | Pilot valve body | A216 WCB; A351 CF8 / 1.4308 | A351 CF8 / 1.4308 |
| **2A** | Low pressure pilot valve body | A216 WCB; A351 CF8 / 1.4308 | A351 CF8 / 1.4308 |
| **2B** | Adapting flange | C45E / 1.1191 | AISI 316 / 1.4401 |
| **3** | Top cover | A216 WCB; A351 CF8 / 1.4308 | A351 CF8 / 1.4308 |
| **3A** | Spring cover | A216 WCB; A351 CF8 / 1.4308 | A351 CF8 / 1.4308 |
| **3B** | Dome-loading cover | C45E / 1.1191 | AISI 316 / 1.4401 |
| **4** | * Main valve seat | AISI 316 / 1.4401 | AISI 316 / 1.4401 |
| **5** | * Main valve plug | Hardened stainless steel | Hardened stainless steel |
| **5A** | * Main valve plug (soft) | AISI 316 w/ PTFE/GR; Rulon | AISI 316 w/ PTFE/GR; Rulon |
| **6** | * Main valve spring | AISI 302 / 1.4300 | AISI 302 / 1.4300 |
| **7** | * Piston | Brass / Bronze | Brass / Bronze |
| **7A** | Piston guide | AISI 316 / 1.4401 | AISI 316 / 1.4401 |
| **8** | * Piston ring | Bronze / FKM / EPDM / NBR | Bronze / FKM / EPDM / NBR |
| **9** | Piston liner | AISI 304 / 1.4301 | AISI 304 / 1.4301 |
| **10** | Bottom cover | S355JR / 1.0045 | AISI 316 / 1.4401 |
| **11** | * Bottom cover gasket | Stainless steel / Graphite | Stainless steel / Graphite |
| **12** | * Diaphragm | AISI 301 / 1.4310 | AISI 301 / 1.4310 |
| **12A** | * Low pressure diaphragm | AISI 301 / 1.4310 | AISI 301 / 1.4310 |
| **13** | * Diaphragm gasket | Compressed synthetic fibers | Compressed synthetic fibers |
| **13A** | * Low pressure diaphragm gasket | Compressed synthetic fibers | Compressed synthetic fibers |
| **14** | * Pilot valve gasket | Stainless steel / Graphite | Stainless steel / Graphite |
| **15** | Lower spring carrier | Brass | Brass |
| **16** | * Adjustment spring | Steel | Steel |
| **16A** | Diaphragm spring | Stainless steel | Stainless steel |
| **16B** | O-ring | FPM | FPM |
| **17** | Top spring carrier | Brass | Brass |
| **18** | Spring identification plate | Aluminium | Aluminium |
| **19** | * Pilot valve plug | AISI 316 / 1.4401 | AISI 316 / 1.4401 |
| **19A** | * Pilot valve plug (soft) | PTFE/GR; Rulon, etc. | PTFE/GR; Rulon, etc. |
| **20** | * Pilot valve seat | AISI 316 / 1.4401 | AISI 316 / 1.4401 |
| **20A** | Pushrod | AISI 316 / 1.4401 | AISI 316 / 1.4401 |
| **21** | * Pilot valve gasket | Copper | Copper / PTFE |
| **22** | * Pilot valve spring | AISI 302 / 1.4300 | AISI 302 / 1.4300 |
| **23** | Adjustment knob | Plastic / Stainless steel | Plastic / Stainless steel |
| **23A** | Lock nut | AISI 304 / 1.4301 | AISI 304 / 1.4301 |
| **23B** | Bolt | Stainless steel A2-70 | Stainless steel A2-70 |
| **23C** | Cover | AISI 303 / 1.4305 | AISI 303 / 1.4305 |
| **24** | Bolt | ISO 898 or EN 10269 steel | ISO 3506 stainless steel |
| **24C** | Bolt | ISO 898 or EN 10269 steel | ISO 3506 stainless steel |
| **24D** | Stud | ISO 898 or EN 10269 steel | ISO 3506 stainless steel |
| **24E** | Nut | ISO 898 or EN 10269 steel | ISO 3506 stainless steel |
| **25** | Compression fitting | Plated carbon steel | Stainless steel |
| **25A** | Adapter | AISI 304 / 1.4301 | AISI 304 / 1.4301 |
| **25B** | Gasket | Copper | Copper |
| **25C** | Plug | AISI 304 / 1.4301 | AISI 304 / 1.4301 |
| **26** | Sensing pipe | Copper | Stainless steel |
| **27** | * Pilot valve strainer | AISI 304 / 1.4301 | AISI 304 / 1.4301 |
| **28** | Strainer nut | AISI 304 / 1.4301 | AISI 304 / 1.4301 |
| **29** | Gasket | Copper | Copper |
| **30** | Plug | AISI 316 / 1.4401 | AISI 316 / 1.4401 |
| **31** | Gasket | Copper | Copper |
| **32** | Plain bearing | Bronze / steel | Bronze / steel |

* Available spare parts.



We reserve the right to change the design and material of this product without notice.

STANDARD VALVE FOR STEAM, COMPRESSED AIR AND OTHER GASES

The high pressure upstream gas enters the main valve and the pilot valve. Compression of the regulating spring over the diaphragm causes the pilot valve to open, admitting regulated pressure to the piston chamber. The force exerted by the regulated pressure on top of the piston pushes it down which, in turn, opens the main valve. The downstream pressure is then transmitted through the sensing line, acting below the diaphragm.
Any downstream pressure increase deflects the diaphragm, and the pilot valve closes, thus shutting off regulated gas to the piston which, in turn, closes the main valve. When the desired downstream pressure is achieved, the valve opens again, repeating the process.

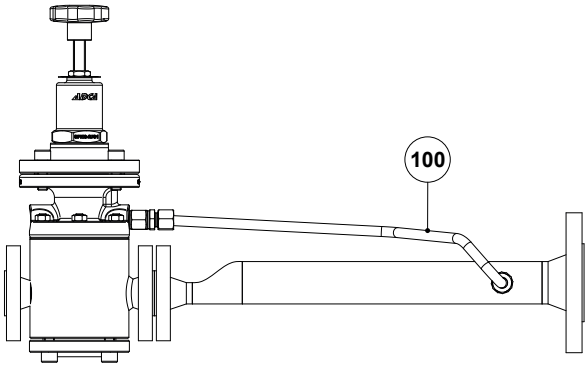


*Standard valve*

The external sensing line (100) must always be connected unless the valve is supplied with an internal sensing line. It should be fitted in the downstream pipe at a distance of, at least, 1 meter or 15 pipe diameters, whichever is greater, from the valve and other fittings. A spool piece can be supplied to house the sensing.

**Warning**: Internal sensing line is not recommended when:
- The reduced pressure is below 50% of the inlet pressure (mandatory for pressure reductions greater than 10:1);
- Instability of reduced pressure occurs;
- When a low pressure diaphragm assembly is fitted;
- In systems with difficult outlet pipe work conditions.

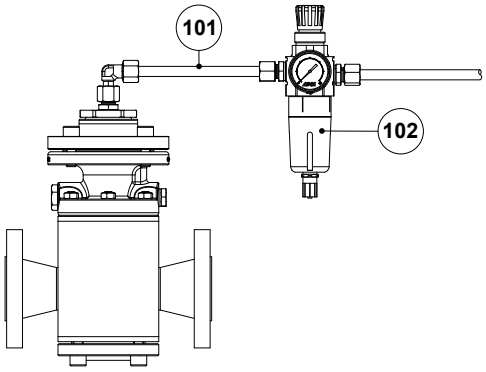


*Dome-loading valve*

DOME-LOADING

The loading force is exerted on the pilot valve diaphragm by an external gas signal rather than by the regulating spring. This feature allows remote adjusting of the downstream set point pressure using a relieving gas pressure regulator or an I/P converter. Allows faster response to pressure changes and maintains outlet pressure more accurately under flowing conditions, when compared to the standard spring loaded version, minimizing droop.
The loading control pressure is approximately the same as the required outlet pressure (± 0,2 bar).

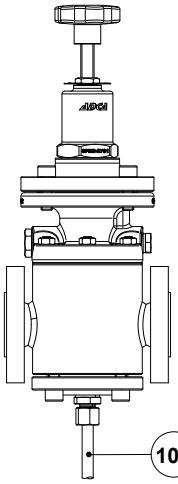


*Valve with drain connection*

DRAIN CONNECTION

The optional drain connection is specially recommended for steam applications where it is not possible to install a humidity separator close to the valve, when the valve is under no-flow static condition during large periods of time or for system cleaning during start up.


We reserve the right to change the design and material of this product without notice.

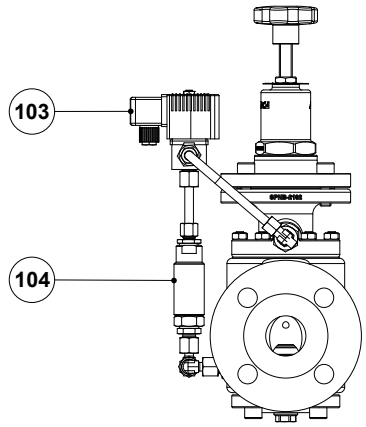


*Valve with solenoid valve for remote closure*

## VALVE WITH SOLENOID VALVE FOR REMOTE CLOSURE (PRV47E)

The PRV47E operates like the standard valve, but it allows remote closure by means of a switch or timer. When the solenoid valve closes, the pressure signal to the pilot valve is interrupted, causing the main valve to close.

| TECHNICAL DATA (SOLENOID VALVE) | |
|---|---|
| Body material | Brass or stainless steel |
| Maximum operating pressure | 10 bar |
| Maximum operating temperature | 180 ºC |
| Level of protection | IP 65 |
| Rated voltage | 230 V AC ±10%, 24 V DC ±10% * |
| Power consumption | 12 VA ±10% (AC)<br>12 W ±10% (DC) |

* Others on request.

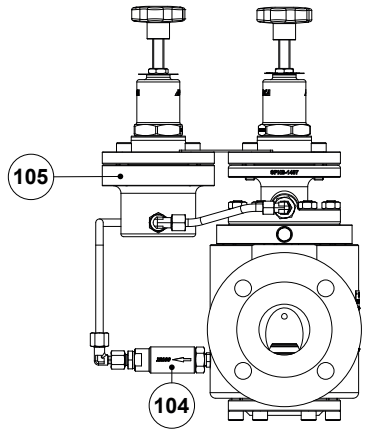


*Pressure reducing and sustaining valve*

## PRESSURE REDUCING AND SUSTAINING VALVE (PRS47)

The PRS47 is a derivative of the PRV47 and consists of a combination between a pressure reducing valve and a pressure sustaining valve. While the pilot fitted on the main valve body controls downstream pressure, a secondary pilot valve (105), in this case a pressure sustaining valve, fitted on the side of the PRV controls the upstream pressure. The pressure sustaining valve is closed until the established set pressure is reached, and so is the main valve, since there is no flow feeding its pilot. As soon as the set pressure is reached, the pressure sustaining valve opens, allowing flow to the PRV's pilot valve which, in turn, opens the main valve.

| EQUIPMENT | | |
|---|---|---|
| **POS. No.** | **DESIGNATION** | **MATERIAL** |
| **100** | Sensing pipe | Copper or stainless steel |
| **101** | Compressed air supply | Copper or stainless steel |
| **102** | P10 air filter regulator | Polycarbonate |
| **103** | Solenoid valve | Brass or stainless steel |
| **104** | ADCA IS100 filter | AISI 316 / 1.4401 |
| **105** | ADCA PS7 pressure sustaining valve | Carbon steel or stainless steel |
| **106** | Drain connection | Copper or stainless steel |



We reserve the right to change the design and material of this product without notice.

## CAPACITY TABLE

| INLET (barg) | OUTLET (barg) | SATURATED STEAM (kg/h) | | | | | | COMPRESSED AIR (Nm³/h – 0 ºC – 1,013 bar) | | | | | |
|---|---|---|---|---|---|---|---|---|---|---|---|---|---|
| | | DN 15 | DN 20 | DN 25 | DN 32 | DN 40 | DN 50 | DN 15 | DN 20 | DN 25 | DN 32 | DN 40 | DN 50 |
| 0,7 | 0,35 | 40 | 75 | 125 | 190 | 280 | 480 | 15 | 31 | 50 | 70 | 111 | 191 |
| 1 | 0,4 | 45 | 95 | 160 | 240 | 355 | 620 | 16 | 33 | 51 | 79 | 113 | 194 |
| | 0,6 | 40 | 83 | 140 | 210 | 308 | 535 | 27 | 55 | 90 | 138 | 199 | 343 |
| 2 | 0,4 – 1 | 75 | 150 | 250 | 380 | 545 | 960 | 60 | 122 | 201 | 307 | 444 | 763 |
| | 1,2 | 65 | 138 | 230 | 345 | 515 | 900 | 54 | 109 | 180 | 276 | 399 | 686 |
| | 1,6 | 50 | 105 | 175 | 265 | 393 | 685 | 45 | 91 | 150 | 230 | 333 | 572 |
| 3 | 0,4 – 1,5 | 100 | 200 | 335 | 510 | 750 | 1310 | 120 | 240 | 300 | 460 | 666 | 1150 |
| | 2 | 85 | 170 | 290 | 450 | 660 | 1155 | 105 | 210 | 251 | 384 | 555 | 1050 |
| | 2,2 | 80 | 165 | 277 | 416 | 613 | 1050 | 48 | 93 | 152 | 232 | 334 | 570 |
| | 2,6 | 60 | 127 | 203 | 315 | 467 | 818 | 45 | 61 | 101 | 154 | 223 | 384 |
| 4 | 0,4 – 2 | 125 | 250 | 420 | 630 | 920 | 1580 | 150 | 238 | 499 | 739 | 1089 | 1825 |
| | 2,5 | 114 | 225 | 385 | 580 | 850 | 1465 | 135 | 208 | 449 | 568 | 978 | 1635 |
| | 3,2 | 92 | 183 | 309 | 482 | 708 | 1205 | 119 | 177 | 398 | 492 | 867 | 1444 |
| | 3,6 | 68 | 137 | 237 | 353 | 536 | 932 | 60 | 124 | 202 | 154 | 444 | 763 |
| 5 | 0,4 – 2 | 150 | 310 | 512 | 755 | 1114 | 1895 | 180 | 360 | 505 | 768 | 1110 | 1908 |
| | 3 | 144 | 295 | 488 | 743 | 1095 | 1835 | 165 | 330 | 556 | 691 | 997 | 1716 |
| | 4 | 115 | 225 | 373 | 578 | 846 | 1430 | 151 | 298 | 404 | 613 | 885 | 1526 |
| | 4,2 | 105 | 213 | 343 | 525 | 770 | 1342 | 136 | 285 | 383 | 582 | 840 | 1449 |
| 6 | 0,4 – 3 | 175 | 355 | 602 | 919 | 1358 | 2298 | 210 | 468 | 696 | 1046 | 1523 | 2580 |
| | 4 | 159 | 314 | 538 | 827 | 1217 | 2142 | 195 | 437 | 646 | 969 | 1412 | 2389 |
| | 5 | 119 | 250 | 411 | 637 | 941 | 1644 | 150 | 345 | 494 | 738 | 1079 | 1817 |
| | 5,2 | 109 | 217 | 360 | 568 | 839 | 1465 | 135 | 315 | 443 | 664 | 968 | 1627 |
| 7 | 0,4 – 3,5 | 197 | 410 | 670 | 1005 | 1540 | 2644 | 240 | 480 | 804 | 1200 | 1740 | 2989 |
| | 5 | 178 | 358 | 587 | 908 | 1345 | 2306 | 210 | 421 | 701 | 1046 | 1524 | 2640 |
| | 6 | 132 | 271 | 452 | 688 | 1027 | 1773 | 150 | 301 | 499 | 756 | 1104 | 1829 |
| | 6,2 | 122 | 251 | 416 | 635 | 934 | 1618 | 105 | 211 | 349 | 529 | 773 | 1280 |
| 8 | 0,4 – 4 | 225 | 471 | 778 | 1169 | 1759 | 3043 | 270 | 546 | 798 | 1353 | 1746 | 3411 |
| | 5 | 221 | 339 | 730 | 1118 | 1659 | 2884 | 265 | 516 | 747 | 1276 | 1635 | 3220 |
| | 6 | 192 | 385 | 639 | 976 | 1451 | 2513 | 225 | 449 | 710 | 1125 | 1635 | 2762 |
| | 7 | 146 | 293 | 481 | 732 | 1085 | 1887 | 180 | 361 | 600 | 892 | 1296 | 2184 |
| | 7,2 | 137 | 274 | 453 | 692 | 1011 | 1782 | 156 | 312 | 540 | 768 | 1128 | 1978 |
| 9 | 0,4 – 5 | 251 | 518 | 856 | 1325 | 1923 | 3358 | 301 | 612 | 1011 | 1507 | 2244 | 3789 |
| | 6 | 241 | 500 | 788 | 1222 | 1766 | 3095 | 270 | 553 | 910 | 1359 | 1980 | 3474 |
| | 7 | 206 | 398 | 679 | 1068 | 1559 | 2676 | 240 | 492 | 816 | 1230 | 1798 | 2970 |
| | 8 | 156 | 314 | 514 | 794 | 1142 | 2053 | 180 | 360 | 598 | 903 | 1288 | 2247 |
| | 8,2 | 145 | 292 | 483 | 741 | 1090 | 1888 | 165 | 329 | 547 | 826 | 1176 | 2056 |
| 10 | 0,4 – 5 | 275 | 561 | 944 | 1468 | 2127 | 3718 | 330 | 659 | 1116 | 1692 | 2412 | 4173 |
| | 6 | 272 | 551 | 917 | 1419 | 2074 | 3619 | 314 | 628 | 1065 | 1615 | 2301 | 3983 |
| | 7 | 252 | 508 | 838 | 1268 | 1871 | 3249 | 288 | 599 | 1004 | 1503 | 2202 | 3810 |
| | 8 | 213 | 431 | 722 | 1118 | 1659 | 2831 | 240 | 492 | 806 | 1212 | 1770 | 3022 |
| | 9 | 163 | 333 | 548 | 843 | 1244 | 2152 | 192 | 360 | 658 | 898 | 1350 | 2280 |
| | 9,2 | 150 | 298 | 493 | 756 | 1143 | 1929 | 181 | 342 | 628 | 852 | 1283 | 2165 |
| 12 | 1 – 6 | 330 | 680 | 1124 | 1732 | 2541 | 4407 | 390 | 792 | 1300 | 1978 | 2844 | 4917 |
| | 8 | 311 | 629 | 1023 | 1575 | 2332 | 4034 | 360 | 732 | 1219 | 1827 | 2622 | 4497 |
| | 10 | 265 | 533 | 812 | 1271 | 1867 | 3202 | 270 | 553 | 910 | 1359 | 1980 | 3474 |
| | 11 | 175 | 364 | 568 | 924 | 1350 | 2359 | 210 | 468 | 696 | 1046 | 1523 | 2580 |
| 15 | 1 – 8 | 408 | 839 | 1373 | 2138 | 3118 | 5403 | 480 | 972 | 1602 | 2427 | 3564 | 6072 |
| | 12 | 339 | 656 | 1068 | 1629 | 2441 | 4250 | 375 | 762 | 1272 | 1923 | 2784 | 4692 |
| | 14 | 199 | 401 | 662 | 1017 | 1503 | 2619 | 255 | 528 | 889 | 1332 | 1896 | 3398 |
| 17 | 1 – 9 | 425 | 863 | 1460 | 2178 | 3165 | 5343 | 540 | 912 | 1819 | 2737 | 3984 | 6618 |
| | 15 | 347 | 709 | 1190 | 1816 | 2694 | 4712 | 315 | 708 | 1179 | 1764 | 2520 | 4418 |
| | 16 | 207 | 416 | 717 | 1217 | 1608 | 2824 | 255 | 528 | 889 | 1332 | 1896 | 3398 |
| 20 | 1 – 12 | 541 | 1062 | 1774 | 2746 | 4001 | 6971 | 615 | 1254 | 2379 | 3153 | 4578 | 7911 |
| | 15 | 459 | 931 | 1552 | 2335 | 3476 | 6184 | 534 | 900 | 1799 | 2707 | 3940 | 6738 |
| | 17 | 391 | 648 | 988 | 1748 | 2840 | 4698 | 450 | 901 | 1497 | 2246 | 3336 | 5796 |
| 25 | 2,5 – 12 | 685 | 1337 | 2191 | 3360 | 4971 | 8392 | 780 | 1590 | 2689 | 3982 | 5790 | 9902 |
| | 15 | 680 | 1320 | 2183 | 3356 | 4877 | 8284 | 756 | 1530 | 2548 | 3828 | 5616 | 9600 |
| | 17 | 641 | 1256 | 2084 | 3156 | 4670 | 7866 | 720 | 1464 | 2412 | 3707 | 5130 | 9123 |
| 28 | 5 – 15 | 781 | 1521 | 3355 | 3864 | 5611 | 9862 | 870 | 1770 | 2910 | 4430 | 6390 | 10950 |
| | 17 | 763 | 1471 | 3259 | 3768 | 5506 | 9652 | 840 | 1724 | 2820 | 4320 | 6180 | 10680 |



We reserve the right to change the design and material of this product without notice.

## ORDERING CODES PRV47

| VALVE MODEL | VR.47 | | | S. | 1 | | | 1 | A | 15 | |
|---|---|---|---|---|---|---|---|---|---|---|---|
| PRV47 – Steam (standard) | VR.47 | | | | | | | | | | |
| PRV47G – Compressed air and gases | VR.47G | | | | | | | | | | |
| **BODY MATERIAL** | | | | | | | | | | | |
| S355JR / 1.0045 or P250GH / 1.0460 carbon steel | | (1) | | | | | | | | | |
| AISI 316 / 1.4401 stainless steel | | I | | | | | | | | | |
| **OPTIONS** | | | | | | | | | | | |
| Standard valve with external sensing line connection | | | (1) | | | | | | | | |
| Valve with internal sensing line | | | O | | | | | | | | |
| Solenoid valve for remote closure and external sensing line connection **(a)** | | | E | | | | | | | | |
| Solenoid valve for remote closure with internal sensing line **(a)** | | | EO | | | | | | | | |
| Pressure sustaining / reducing for external sensing line connection **(b)** | | | S | | | | | | | | |
| Pressure sustaining / reducing with internal sensing line **(b)** | | | SO | | | | | | | | |
| Pressure sustaining / reducing / solenoid for external sensing line connection **(a)** | | | Y | | | | | | | | |
| Pressure sustaining / reducing / solenoid with internal sensing line **(a)** | | | YO | | | | | | | | |
| **DIAPHRAGM** | | | | | | | | | | | |
| Standard diaphragm | | | | S. | | | | | | | |
| Low pressure diaphragm | | | | L. | | | | | | | |
| **REGULATING RANGE** | | | | | | | | | | | |
| Green spring – 0,35 to 2 bar (0,07 to 0,5 bar with low pressure diaphragm) – single diaphragm | | | | | 1 | | | | | | |
| Blue spring – 1,5 to 5,5 bar – single diaphragm | | | | | 2 | | | | | | |
| Red spring – 3,5 to 8,5 bar – double diaphragm | | | | | 3 | | | | | | |
| Black spring – 7 to 17 bar – double diaphragm | | | | | 4 | | | | | | |
| 0,35 to 4 bar – single diaphragm (dome-loading) **(c)** | | | | | 6 | | | | | | |
| 2 to 17 bar – double diaphragm (dome-loading) **(c)** | | | | | 7 | | | | | | |
| **PISTON RINGS (d)** | | | | | | | | | | | |
| Bronze | | | | | | (1) | | | | | |
| FPM – Tmax 200 ºC | | | | | | V | | | | | |
| EPDM – Tmax 130 ºC | | | | | | E | | | | | |
| NBR – Tmax 80 ºC | | | | | | N | | | | | |
| **DRAIN CONNECTION AND TOP CAP** | | | | | | | | | | | |
| None | | | | | | | (1) | | | | |
| Drain connection ISO 228 3/8" | | | | | | | D | | | | |
| Drain connection 3/8" NPT | | | | | | | E | | | | |
| Top cap (adjustment screw with cover) | | | | | | | G | | | | |
| Top cap and drain connection ISO 228 3/8" | | | | | | | H | | | | |
| Top cap and drain connection 3/8" NPT | | | | | | | I | | | | |
| **VALVE SEALING** | | | | | | | | | | | |
| Standard metal to metal with hardened plug | | | | | | | | 1 | | | |
| Stellited plug and seat | | | | | | | | 2 | | | |
| Soft sealed with virgin PTFE – Tmax 180 ºC | | | | | | | | 3 | | | |
| Soft sealed with PTFE/GR – Tmax 200 ºC | | | | | | | | 4 | | | |
| Soft sealed with Rulon® – Tmax 220 ºC | | | | | | | | 5 | | | |
| Soft sealed with FPM – Tmax 200 ºC | | | | | | | | 6 | | | |
| **PIPE CONNECTIONS** | | | | | | | | | | | |
| Threaded ISO 228 | | | | | | | | | A | | |
| Threaded NPT | | | | | | | | | C | | |
| Socket weld (SW) ASME B16.11 | | | | | | | | | H | | |
| Flanged EN 1092-1 PN 40 | | | | | | | | | N | | |
| Flanged ASME B16.5 Class 150 | | | | | | | | | U | | |
| Flanged ASME B16.5 Class 300 | | | | | | | | | V | | |
| **SIZE** | | | | | | | | | | | |
| DN 15 or 1/2" | | | | | | | | | | 15 | |
| DN 20 or 3/4" | | | | | | | | | | 20 | |
| ... | | | | | | | | | | | |
| **SPECIAL CONSTRUCTION / ADDITIONAL OPTIONS** | | | | | | | | | | | |
| A full description must to be provided and validated in case of a non-standard construction | | | | | | | | | | | E |

**(1)** Omitted if a standard valve is requested.
**(a)** Solenoid valve voltage must be specified.
**(b)** ADCA PS7 pressure sustaining valve. See respective datasheet for regulating range and further information.
**(c)** The loading control pressure is approximately the same as the required downstream pressure (± 0,2 bar).



We reserve the right to change the design and material of this product without notice.