COMPACT TRAPPING STATIONS
CTS4U
(For use with universal swivel connector steam traps)

DESCRIPTION

The UniADCA CTS4U is a complete and compact steam trapping station designed to be used as an alternative to traditional multi-component trap stations, simplifying maintenance and reducing downtime and associated costs.
The swivel connector allows steam trap replacement in only a few minutes without disturbing the pipeline.
Compatible with “two-bolt" UniADCA universal steam traps and other universal steam traps with swivel connector.
Typical installations include drip service on steam lines, tracing, SKID’s and small process equipment.



CTS4U

MAIN FEATURES

Built-in strainer and check valve.
Reduced downtime and costs due to easy in-line maintenance.
Safe depressurization through bleed valve or BDV.
Available in multiple configurations.
Extended handles for thermal insulation, with locking system.
Universal steam traps can swivel 360°, allowing the steam trap to be fitted in the correct position, regardless of pipeline configuration.



CTS4UD

OPTIONS: BDV – Blowdown valve.

USE: Saturated and superheated steam.

AVAILABLE MODELS:
CTS4U – standard valve.
CTS4UD – double block at the inlet.
CTS4UDB – double block and bleed at the inlet.
CTS4UDBV – double block and bleed and vertical inlet.
CTS4UDB2 – double block and bleed at both inlet and outlet.
CTS4UDB2-VH – double block and bleed at both inlet and outlet; vertical inlet and horizontal outlet.

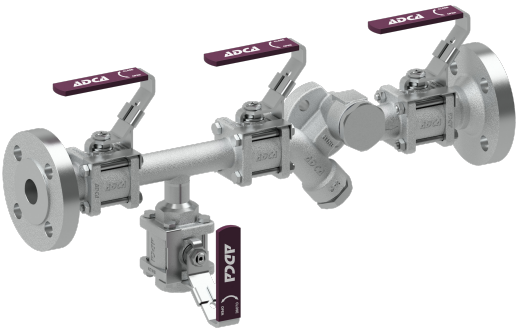

CTS4UDB

SIZES: 1/2" to 1"; DN 15 to DN 25.

CONNECTIONS: Female threaded ISO 7 Rp or NPT.
Flanged EN 1092-1 PN 40.
Flanged ASME B16.5 Class 150 or Class 300.
Socket weld (SW) ASME B16.11.

INSTALLATION: See IMI – Installation and maintenance instructions.

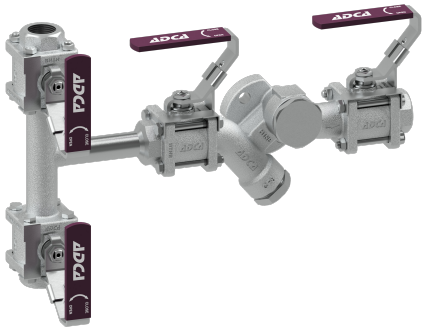

CTS4UDBV

LIMITING CONDITIONS		
Body design conditions		PN 40
Maximum operating pressure for saturated steam	Flanged Class 150	13,6 bar @ 197 ºC
	Other connections	17,5 bar @ 208,5 ºC
Maximum operating temperature		230 ºC @ 10 bar
Minimum operating temperature		-10 ºC

CE MARKING – GROUP 2 (PED – EUROPEAN DIRECTIVE)	
PN 40	**CATEGORY**
1/2" to 1" – DN 15 to 25	SEP

We reserve the right to change the design and material of this product without notice.

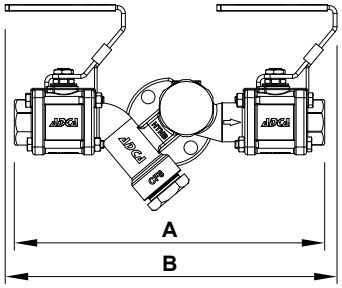

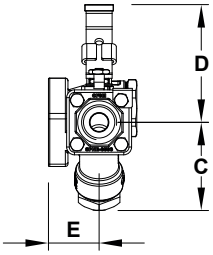

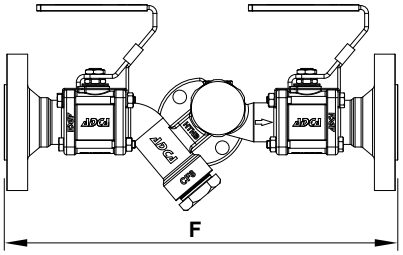

DIMENSIONS – CTS4U (mm)

SIZE	THREADED						PN 40		CLASS 150		CLASS 300	
	A	B	C	D	E	WGT. (kg)	F	WGT. (kg)	F	WGT. (kg)	F	WGT. (kg)
1/2" – DN 15	239	256	68	91	39	3	303 *	4,9	303 *	4,1	303 *	5
3/4" – DN 20	239	256	68	91	39	3	303	5,4	303	4,7	303 *	6
1" – DN 25	287	–	68	91	39	3,3	303	5,8	303 *	5,4	303 *	6,2

* Dimension has undergone changes since 2025. Valves may still be supplied with the previous dimension under request. Consult the manufacturer.

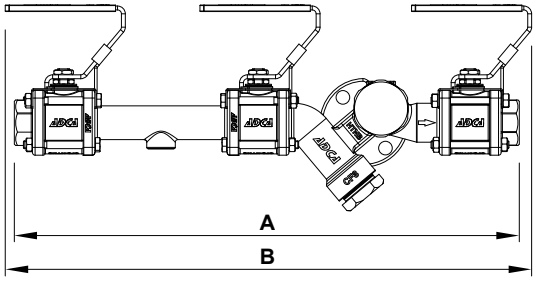

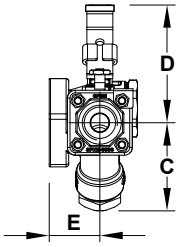

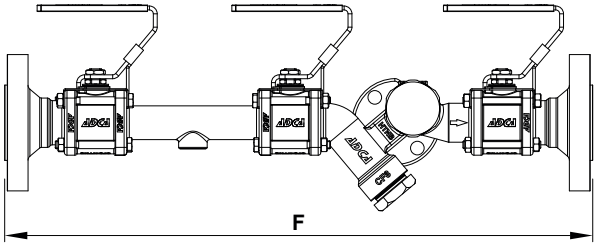

DIMENSIONS – CTS4UD (mm)

SIZE	THREADED						PN 40		CLASS 150		CLASS 300	
	A	B	C	D	E	WGT. (kg)	F	WGT. (kg)	F	WGT. (kg)	F	WGT. (kg)
1/2" – DN 15	389	406	68	91	39	4,1	453 *	6	453 *	5,3	453 *	6
3/4" – DN 20	389	406	68	91	39	4,1	453	6,5	453	5,8	453 *	7
1" – DN 25	437	–	68	91	39	4,4	453	6,8	453 *	7	453 *	7,2

* Dimension has undergone changes since 2025. Valves may still be supplied with the previous dimension under request. Consult the manufacturer.

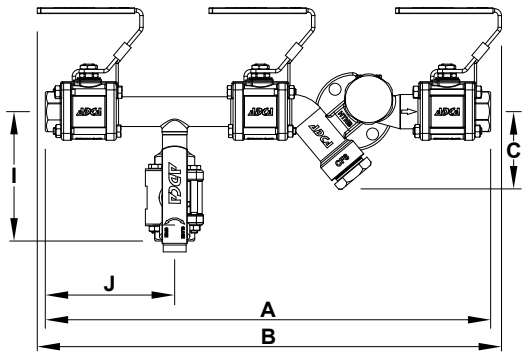

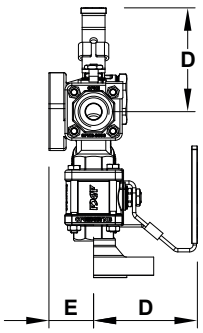

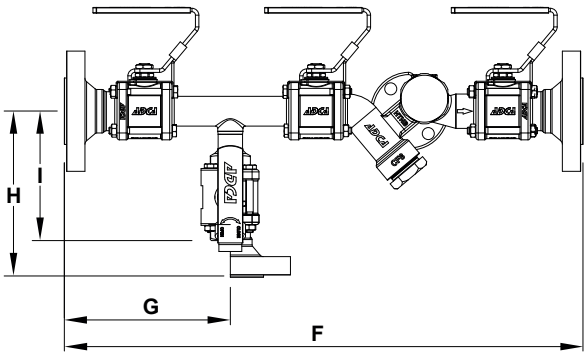

DIMENSIONS – CTS4UDB (mm)

SIZE	THREADED									PN 40			CLASS 150			CLASS 300		
	A	B	C	D	E	H	I	J	WGT. (kg)	F	G	WGT. (kg)	F	G	WGT. (kg)	F	G	WGT. (kg)
1/2" – DN 15	389	406	68	91	39	145	113	113	5,2	453 *	145	8,2	453 *	145	6,9	453 *	145	7,9
3/4" – DN 20	389	406	68	91	39	145	113	113	5,2	453 *	145	8,6	453 *	145	7,5	453 *	145	9,3
1" – DN 25	437	–	68	91	39	145	137	137	5,5	453 *	145	9,1	453 *	145	8,4	453 *	145	9,9

* Dimension has undergone changes since 2025. Valves may still be supplied with the previous dimension under request. Consult the manufacturer.

We reserve the right to change the design and material of this product without notice.

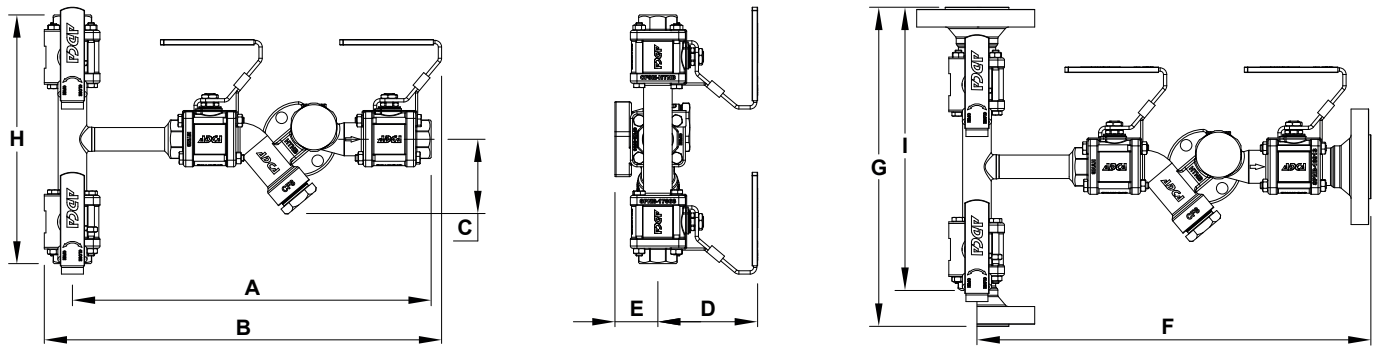

DIMENSIONS – CTS4UDBV (mm)

SIZE	THREADED							PN 40				CLASS 150				CLASS 300			
	A	B	C	D	E	H	WGT. (kg)	F	G	I	WGT. (kg)	F	G	I	WGT. (kg)	F	G	I	WGT. (kg)
1/2" – DN 15	326	361	68	91	39	226	5,3	358	290	258	8	358	290	258	7	358	290	258	7,9
3/4" – DN 20	326	361	68	91	39	226	5,3	358	290	258	8,7	358	290	258	7,6	358	290	258	9,4
1" – DN 25	350	376	68	91	39	274	5,7	358	290	282	9,2	358	290	282	8,5	358	290	282	9,7

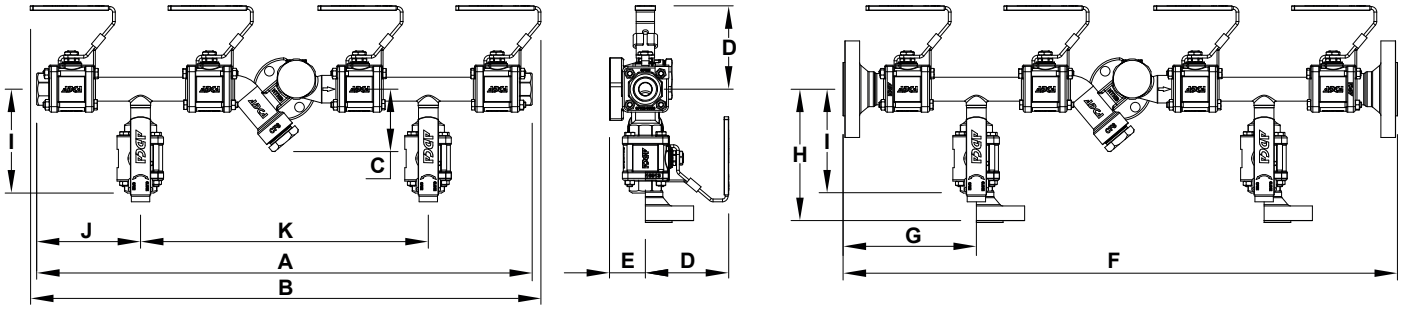

DIMENSIONS – CTS4UDB2 (mm)

SIZE	THREADED										PN 40			CLASS 150			CLASS 300		
	A	B	C	D	E	H	I	J	K	WGT. (kg)	F	G	WGT. (kg)	F	G	WGT. (kg)	F	G	WGT. (kg)
1/2" – DN 15	539	555	68	91	39	145	113	113	313	7	603	145	11	603	145	9,5	603	145	11,7
3/4" – DN 20	539	555	68	91	39	145	113	113	313	7	603	145	11,8	603	145	10,3	603	145	12,5
1" – DN 25	587	–	68	91	39	145	137	137	313	7,5	603	145	12,4	603	145	11,5	603	145	13,5

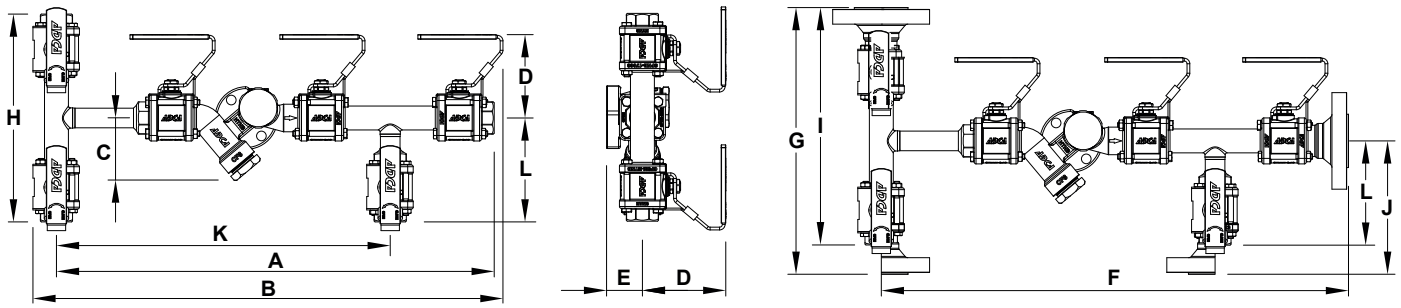

DIMENSIONS – CTS4UDB2-VH (mm)

SIZE	THREADED									PN 40					CLASS 150					CLASS 300				
	A	B	C	D	E	H	K	L	WGT. (kg)	F	G	I	J	WGT. (kg)	F	G	I	J	WGT. (kg)	F	G	I	J	WGT. (kg)
1/2" – DN 15	476	511	68	91	39	226	363	113	7,3	508	290	258	145	11	508	290	258	145	9,5	508	290	258	145	11,7
3/4" – DN 20	476	511	68	91	39	226	363	113	7,3	508	290	258	145	12	508	290	258	145	10,5	508	290	258	145	13
1" – DN 25	487	–	68	91	39	274	363	137	8	508	290	282	145	12,6	508	290	282	145	11,8	508	290	282	145	13,4

We reserve the right to change the design and material of this product without notice.

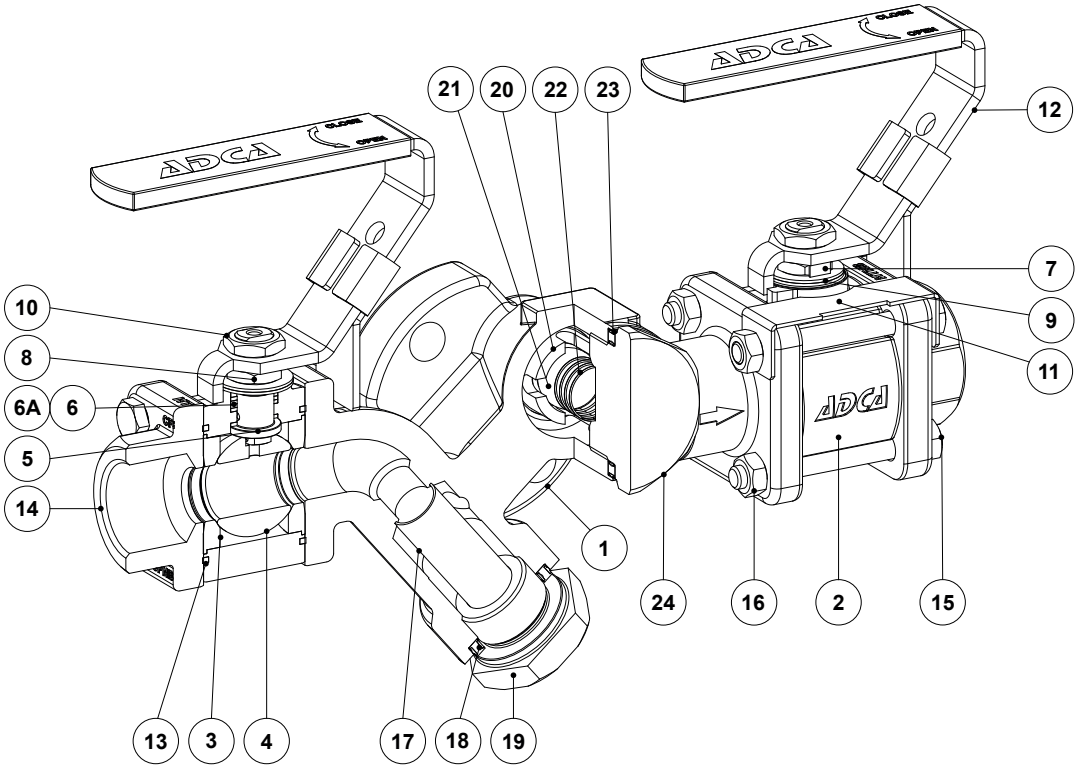

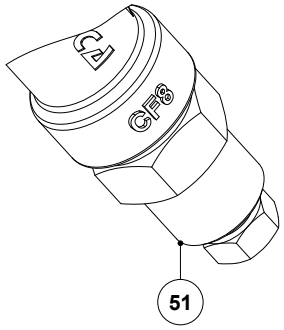

BDV – Blowdown valve (optional)

MATERIALS		
POS. No.	**DESIGNATION**	**MATERIAL**
1	Main valve body	A351 CF8 / 1.4308
2	Ball valve body	A351 CF8 / 1.4308
3	* Seat	PTFE with filler
4	* Valve ball	AISI 316L / 1.4404
5	* Stem	AISI 316L / 1.4404
6	* Stem seal	PTFE with filler
6A	Compression washer	AISI 316L / 1.4404
7	* Lock washer	AISI 304 / 1.4301
8	Compression nut	Stainless steel A2-70
9	* Spring washer	AISI 304 / 1.4301
10	Stem nut	Stainless steel A2-70
11	Locking piece	AISI 304 / 1.4301
12	Handle	AISI 304 / 1.4301; Vinyl
13	* Body seal	PTFE
14	End connection	A351 CF8 / 1.4308
15	Bolt	AISI 304 / 1.4301
16	Nut	Stainless steel A2-70
17	* Strainer screen	AISI 304 / 1.4301
18	* Gasket	Stainless steel / Graphite
19	Strainer plug	AISI 304 / 1.4301
20	* Check valve seat	AISI 304 / 1.4301
21	* Check valve ball	AISI 304 / 1.4301
22	* Spring	AISI 302 / 1.4300
23	* Gasket	Stainless steel / Graphite
24	Check valve cover	AISI 304 / 1.4301
51	BDV blowdown valve	AISI 303 / 1.4305 ; AISI 316L / 1.4404

* Available spare parts.

We reserve the right to change the design and material of this product without notice.

ORDERING CODES CTS4U

MODEL	C4U	2	XXH	XXH	X	X	X	A	15	
CTS4U – A351 CF8 / 1.4308 compact trapping station	**C4U**									
VALVE SERIES										
Series 2		**2**								
INLET CONFIGURATION										
Basic with single isolation (CTS4U)			**XXH**							
Double block (CTS4UD)			**DXH**							
Double block and bleed (CTS4UDB, CTS4UDB2)			**DBH**							
Double block and bleed, vertical inlet (CTS4UDBV, CTS4UDB2-VH)			**DBV**							
OUTLET CONFIGURATION										
Basic with single isolation (CTS4U, CTS4UD, CTS4UDB)				**XXH**						
Double block (non-standard construction)				**DXH**						
Double block and bleed (CTS4UDB2)				**DBH**						
Double block and bleed, vertical outlet (non-standard construction)				**DBV**						
BDV BLOWDOWN VALVE										
Without BDV blowdown valve					**X**					
With BDV blowdown valve					**B**					
SPECIAL FEATURES										
None						**X**				
BLEED (DRAIN) CONNECTIONS										
Without bleed connections (mandatory for models CTS4U and CTS4UD)							**X**			
Threaded bleed connections **(a)**							**T**			
Flanged bleed connections **(b)**							**F**			
PIPE CONNECTIONS										
Female threaded ISO 7 Rp								**A**		
Female threaded NPT ASME B1.20.1								**C**		
Socket weld (SW) ASME B16.11								**H**		
Flanged EN 1092-1 PN 40								**N**		
Flanged ASME B16.5 Class 150								**U**		
Flanged ASME B16.5 Class 300								**V**		
SIZE										
1/2" or DN 15									**15**	
3/4" or DN 20									**20**	
1" or DN 25									**25**	
SPECIAL CONSTRUCTION / ADDITIONAL OPTIONS										
A full description must to be provided and validated in case of a non-standard construction										**E**

(a) As standard, in versions with EN flanges or female ISO 7 Rp threads, these connections are female threaded ISO 7 Rp. In versions with ASME flanges, female NPT threads or SW, these connections are female threaded NPT. Connections follow the same size as the pipe end connections.
(b) Applicable in valves with flanged end connections. Connections follow the same standard and size as the pipe end connections, e.g., if the end connections are flanged EN 1092-1 DN 25 PN 40, the bleed connection is also flanged EN 1092-1 DN 25 PN 40.

We reserve the right to change the design and material of this product without notice.