PRESSURE SUSTAINING VALVES
PS46
(EN)

DESCRIPTION

The ADCA PS46 series pressure sustaining valves are single seated, diaphragm or piston sensing bellows sealed controllers, that operate without auxiliary energy.
These valves are designed for use with steam, compressed air, and other gases compatible with the construction.
These valves are particularly suitable for sustaining steam pressure in all energy and process systems where minimum upstream pressures must be kept under control.

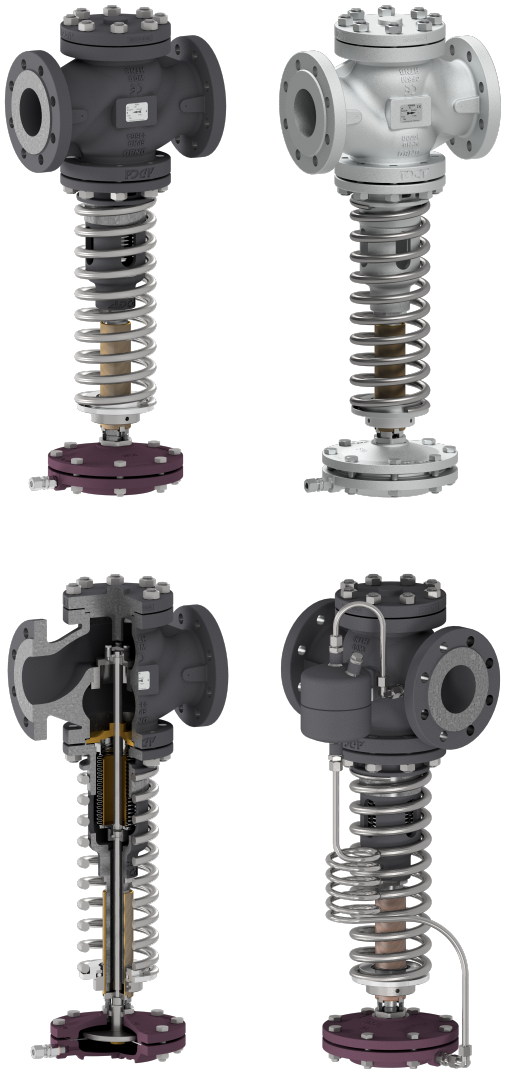

MAIN FEATURES

Specially designed high durability bellows, providing pressure balancing and frictionless plug stem.
Robust construction (fit-and-forget).
Interchangeable actuators and adjustment springs.

OPTIONS: Soft sealing in PTFE/GR for use with steam.
Soft sealing in nitrile rubber for use with air and gases.
Sensing line connection on body.

USE: Steam, compressed air and other gases compatible with the construction. Limited use with liquids. Consult manufacturer before installing the valve with liquids.

AVAILABLE MODELS: PS46S – carbon steel.
PS46i – stainless steel.

SIZES: DN 15 to DN 100.

CONNECTIONS: Flanged EN 1092-1 PN 16 or PN 40.
Flanged ASME B16.5 Class 150 on request (drilled from EN casting).
Standard PN 16 DN 65 flanges are supplied with 4 holes. 8 holes, according to EN 1092-1/-2 on request.

AVAILABLE ACTUATORS: A1A, A11A, A3A, A4A and P55 – carbon steel.
A2A and A21A – SG iron or carbon steel.
A1Ai, A11Ai, A2Ai, A21Ai, A3Ai, A4Ai and P55i – stainless steel.

INSTALLATION: See IMI – Installation and maintenance instructions.
In steam applications, a “Y” strainer, humidity separator, and steam trap should be installed upstream of the valve.

CE MARKING – GROUP 2 (PED – EUROPEAN DIRECTIVE)		
PN 16	**PN 40**	**CATEGORY**
DN 15 to 50	DN 15 to 32	SEP
DN 65 to 100	DN 40 to 100	1 (CE marked)

We reserve the right to change the design and material of this product without notice.

LIMITING CONDITIONS – VALVE		
MODEL	**PS46S and PS46i**	
Body design conditions	PN 16	PN 40
Maximum upstream pressure	13 bar	18 bar
Maximum downstream pressure	13 bar	18 bar
Minimum upstream pressure	0,2 bar	0,2 bar
Maximum operating temperature *	200 ºC	250 ºC
Maximum hydraulic factory valve body test	24 bar	60 bar

* See “Ordering Codes” table for restrictions.

Warning: A pressure sustaining valve is not a safety relief valve and must not be used for that purpose!

LIMITING CONDITIONS – ACTUATOR							
ACTUATOR MODEL	**A1A A1Ai**	**A11A A11Ai**	**A21A A21Ai**	**A2A A2Ai**	**A3A A3Ai**	**A4A A4Ai**	**P55 P55i**
Maximum operating pressure (bar)	25	25	18	12	2,5	1,5	25
Maximum operating temperature	90 ºC *						130 ºC *

* See “Sensing Line Connection Options” table.

FLOW RATE COEFFICIENTS (m³/h)									
SIZE	**DN 15**	**DN 20**	**DN 25**	**DN 32**	**DN 40**	**DN 50**	**DN 65**	**DN 80**	**DN 100**
Kvs	4,8	6,9	9,1	11,8	14,4	26,5	51,5	79,5	129,5

ACTUATOR AND SPRING SELECTION TABLE									
SIZE		**A4A A4Ai**		**A3A A3Ai**	**A2A A2Ai**	**A21A A21Ai**	**A1A A1Ai**	**A11A A11Ai**	**P55 P55i**
DN 15	Regulating range (bar)	0,2 to 0,45	0,45 to 0,9	0,75 to 1,6	1,6 to 3,2	2,4 to 5	3,5 to 7	4,5 to 10	9 to 18
	Spring No.	66	60	60	60	60	60	60	60
DN 20	Regulating range (bar)	0,2 to 0,45	0,45 to 0,9	0,75 to 1,6	1,6 to 3,2	2,4 to 5	3,5 to 7	4,5 to 10	9 to 18
	Spring No.	66	60	60	60	60	60	60	60
DN 25	Regulating range (bar)	0,2 to 0,45	0,45 to 0,9	0,75 to 1,6	1,6 to 3,2	2,4 to 5	3,5 to 7	4,5 to 10	9 to 8
	Spring No.	66	60	60	60	60	60	60	60
DN 32	Regulating range (bar)	0,2 to 0,45	0,45 to 0,9	0,75 to 1,5	1,5 to 3	2,1 to 4,5	3 to 6,5	4,5 to 9	8 to 16
	Spring No.	66	60	60	60	60	60	60	60
DN 40	Regulating range (bar)	0,2 to 0,45	0,45 to 0,9	0,75 to 1,5	1,5 to 3	2,1 to 4,5	3 to 6,5	4,5 to 9	8 to 16
	Spring No.	66	60	60	60	60	60	60	60
DN 50	Regulating range (bar)	0,2 to 0,4	0,3 to 0,9	0,5 to 1,5	1 to 3,2	1,4 to 4,8	2,5 to 7	3 to 10	8 to 18
	Spring No.	67	61	61	61	61	61	61	61
DN 65	Regulating range (bar)	0,2 to 0,4	0,3 to 0,9	0,5 to 1,5	1 to 3,2	1,4 to 4,8	2,5 to 7	3 to 10	8 to 18
	Spring No.	67	61	61	61	61	61	61	61
DN 80	Regulating range (bar)	0,2 to 0,4	0,3 to 0,9	0,4 to 1,4	0,6 to 3	0,8 to 4,2	2 to 6	3 to 8	6 to 16
	Spring No.	68	62	62	62	62	62	62	62
DN 100	Regulating range (bar)	0,2 to 0,4	0,3 to 0,9	0,4 to 1,4	0,6 to 3	0,8 to 4,2	2 to 6	3 to 8	6 to 18
	Spring No.	69	63	63	63	63	63	63	63

We reserve the right to change the design and material of this product without notice.

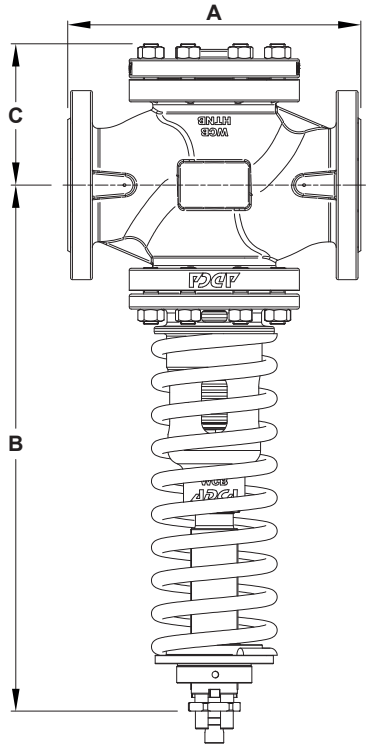

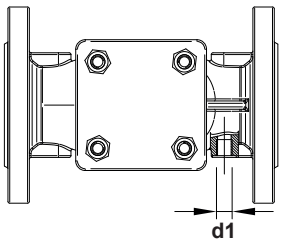

Optional sensing line connection on body

DIMENSIONS – VALVE (mm)									
DIMENSION	**SIZE**								
	DN 15	**DN 20**	**DN 25**	**DN 32**	**DN 40**	**DN 50**	**DN 65**	**DN 80**	**DN 100**
A	130	150	160	180	200	230	290	310	350
B	366	369	371	381	384	470	495	556	597
C	81	84	86	95	100	113	150	150	164
d1	1/4"	1/4"	1/4"	1/4"	1/4"	1/4"	1/4"	1/4"	1/4"
WEIGHT (kg)	10,4	11,8	12,3	15,2	18,6	24,6	41,1	55,1	69,8

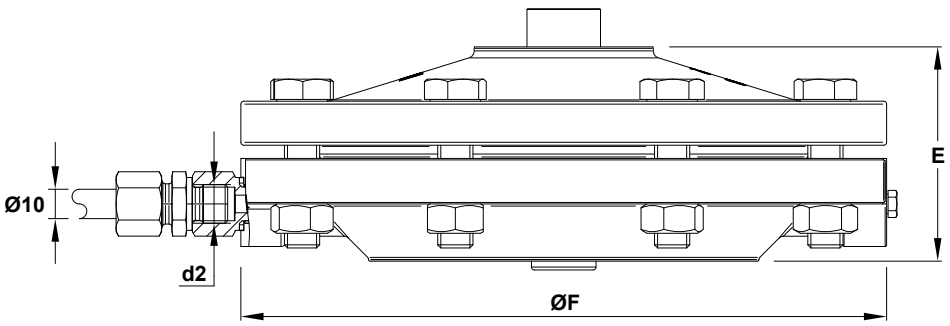

A series actuators

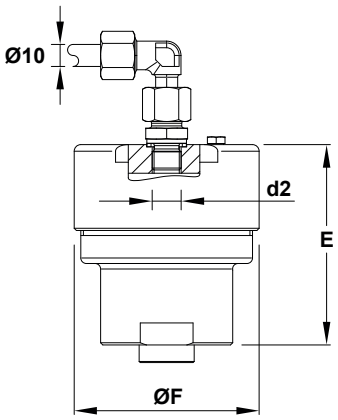

P series actuators

DIMENSIONS – ACTUATOR (mm)							
DIMENSION	**ACTUATOR**						
	A1A A1Ai	**A11A A11Ai**	**A2A A2Ai**	**A21A A21Ai**	**A3A A3Ai**	**A4A A4Ai**	**P55 P55i**
d2	1/4"	1/4"	1/4"	1/4"	1/4"	1/4"	1/4"
E	74	74	80	80	82	92	91
ØF	172	172	220	220	282	340	84
WEIGHT (kg)	5,8	5,8	10,2	10,2	12,6	18,3	2,7

We reserve the right to change the design and material of this product without notice.

SENSING LINE CONNECTION OPTIONS

EXTERNAL SENSING LINE

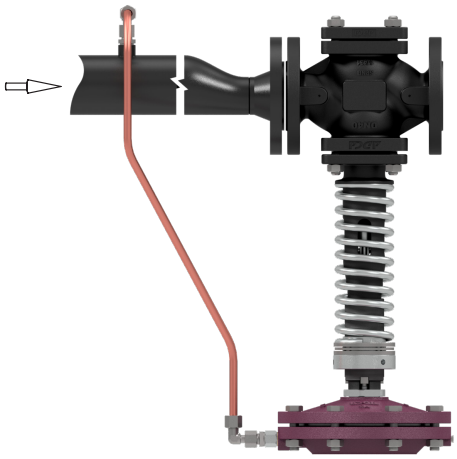

For use with gases below 90 °C. For gases between 90 ºC and 130 °C, please consult the manufacturer.
Installation with the actuator oriented upwards is also acceptable.
The sensing line should be connected at least 1 meter upstream of the valve inlet.

EXTERNAL SENSING LINE WITH POT *

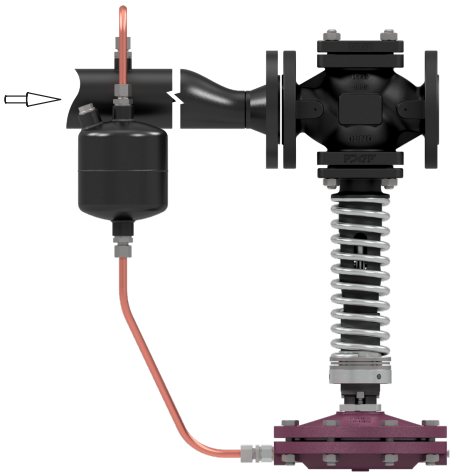

Applicable for steam.
The sensing tube and seal POT are ordered and supplied separately.
Installation must be carried out with the actuator oriented downward.
The sensing line should be connected at least 1 meter upstream of the valve inlet.

SENSING LINE CONNECTION ON BODY



For use with gases below 90 °C. For gases between 90 ºC and 130 °C, please consult the manufacturer.
Installation with the actuator oriented upwards is also acceptable.
The valve can be supplied with the sensing tube factory-installed. If not supplied installed, the connection at the body is delivered closed with a plug.
The image shows the connection and sensing tube positioned on the left side relative to the flow direction. If installation constraints require, the connection may also be made on the right side.

SENSING LINE CONNECTION ON BODY WITH POT *

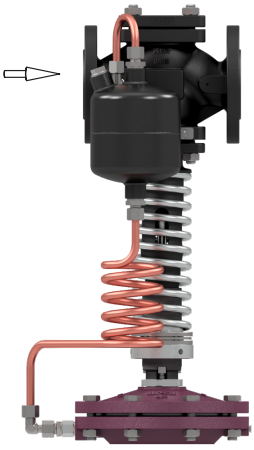

Applicable for steam.
Installation must be carried out with the actuator oriented downward.
The valve can be supplied with the sensing tube and seal POT factory-installed. If these components are not supplied installed, the connection at the body is delivered closed with a plug.
The image shows the connection, sensing tube, and POT positioned on the left side relative to the flow direction. If installation constraints require, the connection may also be made on the right side.

* For more information, please consult IS POT.010 – Water seal pots.

We reserve the right to change the design and material of this product without notice.

MATERIALS

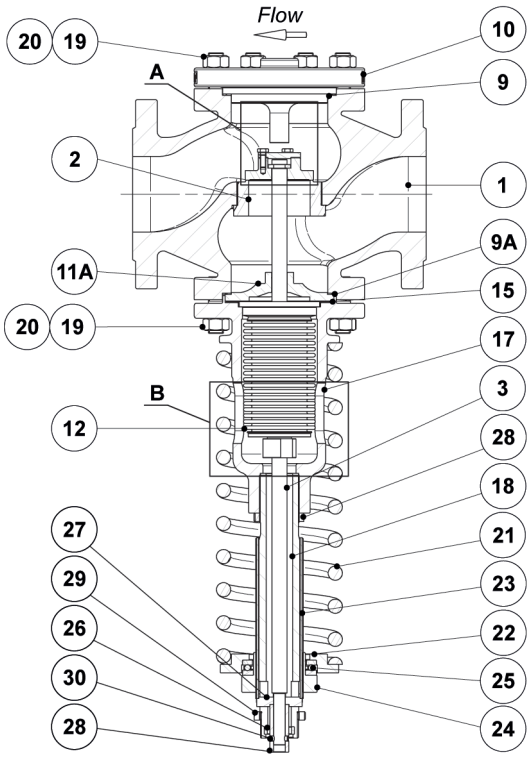

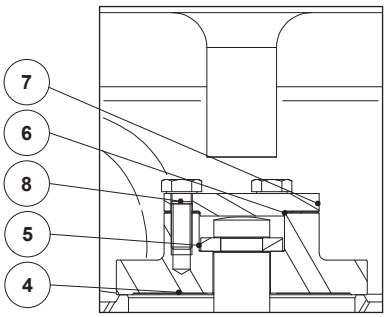

Detail A
(DN 15 to DN 100)

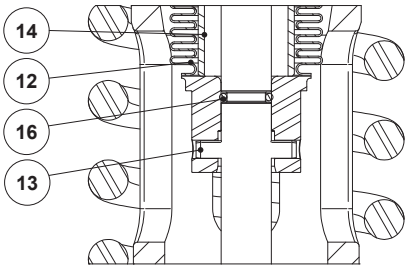

Detail B
(DN 15 to DN 65)

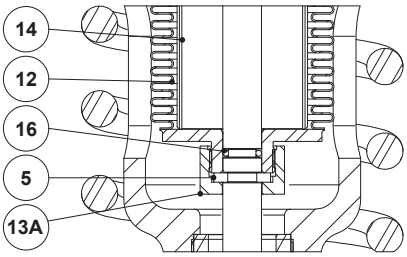

Detail B
(DN 80 to DN 100)

We reserve the right to change the design and material of this product without notice.

MATERIALS – VALVE		
POS. No.	**DESIGNATION**	**MATERIAL**
1	Valve body (PS46)	A216 WCB / 1.0619
	Valve body (PS46i)	A351 CF8M / 1.4408
2	* Seat	AISI 316 / 4.4401
3	* Stem	AISI 304 / 1.4301
4	* Valve plug	AISI 420 / 1.4021
5	* Split ring	AISI 316 / 4.4401
6	* Gasket	Copper
7	* Plug cover	AISI 316 / 1.4401
8	* Bolt	AISI 304 / 1.4301
9	* Gasket	Stainless steel / Graphite
9A	* Gasket	Stainless steel / Graphite
10	Cover (PS46)	A216 WCB / 1.0619
	Cover (PS46i)	A351 CF8M / 1.4408
11	Stem guide	Bronze
12	* Bellows	AISI 316Ti / 1.4571
13	* Pin	–
13A	* Nut	AISI 316 / 1.4401
14	Guide tube	CuZn39Pb3
15	* Gasket	Stainless steel / Graphite
16	* O-ring	EPDM
17	Piston body (PS46)	A216 WCB / 1.0619
	Piston body (PS46i)	A351 CF8M / 1.4408
18	Piston body extension (PS46)	P355T1 / 1.0421
	Piston body extension (PS46i)	AISI 304 / 1.4301
19	Stud (PS46)	Steel 8.8; EN 10269 steel
	Stud (PS46i)	Stainless steel A2-70
20	Nut (PS46)	Steel 8.8; EN 10269 steel
	Nut (PS46i)	Stainless steel A2-70
21	* Adjustment spring	Spring steel
22	Lower spring plate (PS46)	C45E / 1.1191
	Lower spring plate (PS46i)	AISI 304 / 1.4301
23	Threaded tube	CuZn39Pb3
24	Spring adjusting nut	AISI 304 / 1.4301
25	Ball bearing	Zinc plated steel
26	Spacer (PS46)	S355JR / 1.0045
	Spacer (PS46i)	AISI 304 / 1.4301
27	Pressure star (PS46)	S235JR / 1.0038
	Pressure star (PS46i)	AISI 304 / 1.4301
28	Pressure tube (PS46)	C45E / 1.1191
	Pressure tube (PS46i)	AISI 304 / 1.4301
29	Lock nut	AISI 303 / 1.4305
30	Pin	AISI 303 / 1.4305

* Available spare parts. ** Others on request.

We reserve the right to change the design and material of this product without notice.

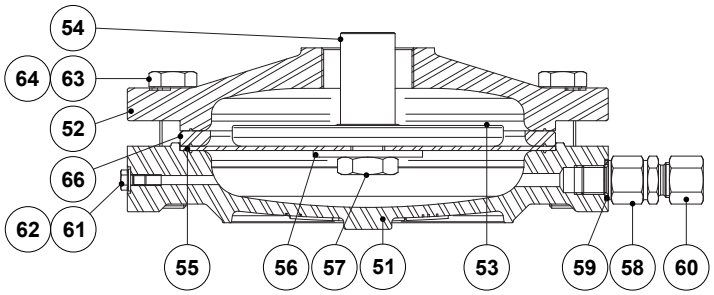

A series actuators

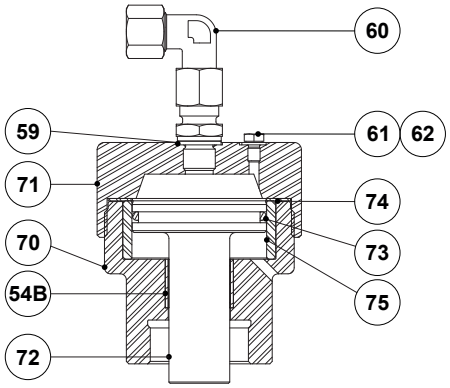

P series actuators

MATERIALS – ACTUATORS

POS. No.	DESIGNATION	A1A, A11A, A3A and A4A	A2A and A21A	A1Ai, A11Ai, A2Ai, A21Ai, A3Ai and A4Ai	P55	P55i
51	Lower diaph. chamber	A216 WCB / 1.0619	GJS-400-15 / 0.7040; A216 WCB / 1.0619	A351 CF8M / 1.4408	–	–
52	Upper diaph. chamber	A216 WCB / 1.0619	GJS-400-15 / 0.7040; A216 WCB / 1.0619	A351 CF8M / 1.4408	–	–
53	Pressure plate	A216 WCB / 1.0619	GJS-400-15 / 0.7040	A351 CF8M / 1.4408; AISI 304 / 1.4301	–	–
54	Diaph. plate spindle	A216 WCB / 1.0619	GJS-400-15 / 0.7040	A351 CF8M / 1.4408; AISI 304 / 1.4301	–	–
54B	Plain bearing	–	–	–	Steel	Bronze / PTFE
55	* Diaphragm	Neoprene reinforced polyamide	Neoprene reinforced polyamide	Neoprene reinforced polyamide	–	–
56	Washer	Copper	Copper	AISI 304 / 1.4301	–	–
57	Hex nut	CuZn39Pb3	CuZn39Pb3	AISI 304 / 1.4301	–	–
58	Flow restrictor	AISI 303 / 1.4305	AISI 303 / 1.4305	AISI 303 / 1.4305	–	–
59	Gasket	Copper	Copper	Copper	Copper	Copper
60	Compression fitting	AISI 316Ti / 1.4571	AISI 316Ti / 1.4571	AISI 316Ti / 1.4571	AISI 316Ti / 1.4571	AISI 316Ti / 1.4571
61	Vent screw	Zinc plated steel	Zinc plated steel	AISI 304 / 1.4301	Zinc plated steel	St. steel A2-70
62	Washer	Copper	Copper	AISI 304 / 1.4301	Copper	Copper
63	Bolt	Zinc plated steel	Zinc plated steel	AISI 304 / 1.4301	–	–
64	Nut	Zinc plated steel	Zinc plated steel	AISI 304 / 1.4301	–	–
66	Spacer ring	S355JR / 1.0045	S355JR / 1.0045	–	–	–
70	Body	–	–	–	S235JR / 1.0038	AISI 316 / 1.4401
71	Cover	–	–	–	S235JR / 1.0038	AISI 316 / 1.4401
72	Piston	–	–	–	AISI 316 / 1.4401	AISI 316 / 1.4401
73	* O-ring	–	–	–	EPDM	EPDM
74	* Gasket	–	–	–	Stainless steel / Graphite	Stainless steel / Graphite
75	Piston sleeve	–	–	–	AISI 304 / 1.4301	AISI 304 / 1.4301

* Available spare parts.

We reserve the right to change the design and material of this product without notice.

ORDERING CODES PS46											
VALVE MODEL	**PS46**	**1**	**S**	**60**	**M**	**0**	**XX**	**X**	**L**	**15**	
PS46 – Pressure sustaining valve	**PS46**										
VALVE SERIES											
Series 1		**1**									
BODY MATERIAL											
A216 WCB / 1.0619 carbon steel			**S**								
A351 CF8M / 1.4408 stainless steel			**I**								
SPRING No.											
60 (DN 15 to DN 40)				**60**							
61 (DN 50 and DN 65)				**61**							
62 (DN 80)				**62**							
63 (DN 100)				**63**							
66 (DN 15 to DN 40)				**66**							
67 (DN 50 and DN 65)				**67**							
68 (DN 80)				**68**							
69 (DN 100)				**69**							
VALVE SEALING											
Metal to metal					**M**						
Soft sealed with PTFE/GR – Tmax 200 °C					**G**						
Soft sealed with NBR – Tmax 80 °C					**N**						
SENSING LINE CONNECTION ON BODY (a)											
Without sensing line connection on body						**0**					
Threaded connection on the bottom (DN 15 to DN 25)						**1**					
Threaded connection on the right side, relative to flow direction (DN 32 to DN 150)						**3**					
Threaded connection on the left side, relative to flow direction (DN 32 to DN 150; non-standard construction)						**4**					
Threaded connection on both sides (DN 32 to DN 150; non-standard construction)						**2**					
OPTIONS											
Standard valve							**XX**				
Valve with carbon steel piston body (only for PS46i)							**XS**				
SPECIAL FEATURES											
None								**X**			
PIPE CONNECTIONS											
Flanged EN 1092-1 PN 16									**L**		
Flanged EN 1092-1 PN 40									**N**		
Flanged ASME B16.5 Class 150									**U**		
SIZE											
DN 15										**15**	
DN 20										**20**	
...											
SPECIAL CONSTRUCTION / ADDITIONAL OPTIONS											
Full description or additional codes have to be added in case of non-standard combination											**E**

(a) Connections are closed with plugs in case the valve is not supplied with the tube pre-assembled from factory.

HOW TO ORDER

Indicate the complete valve ordering code together with the required actuator size. If the valve is to be supplied with factory-installed sensing tube, it must be stated in the order. In that case, also specify wheather a seal POT is to be installed.
Example: PS461S60M1XXXL15 fitted with A2 actuator and sensing line connection on body with POT-4S.

We reserve the right to change the design and material of this product without notice.