HIGH PURITY BALL VALVES
M3HP
(21/2" to 4" – DN 65 to DN 100)

DESCRIPTION

The ADCAPure M3HP three piece body ball valves are isolating valves designed for use with clean steam, condensate and other gases and liquids used in high purity and aseptic processes.
The valve is not designed as a control valve and should only be used as an isolating valve, fully open or fully closed.
The product is mainly designed for the pharmaceutical, biotech, semiconductor, cosmetics, fine chemical and food & beverage industries.

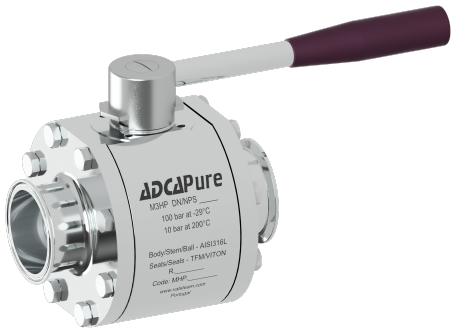

MAIN FEATURES

True or full bore floating ball design.
Completely made from solid bar stock material.
Can be serviced without removal from the pipeline.
Bidirectional.
Antistatic device.
Anti blow out proof stem.
Tube weld with loose body flanges (360º rotation after installation).
ISO 5211 mounting.

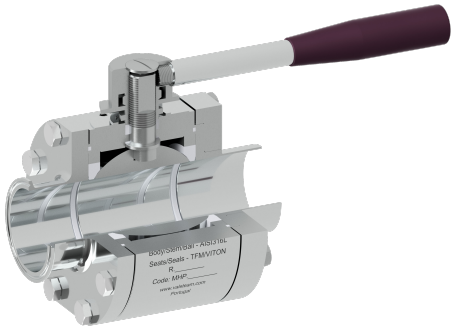

STANDARD SURFACE FINISH

Internal wetted parts: ≤ 0,51 µm Ra – SF1.
External: ≤ 0,76 µm Ra – SF3.
Other surface conditions see TIS.GIA – General information ADCAPure.
Ultrasonic cleaning.

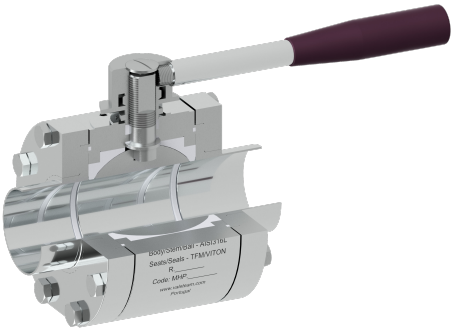

OPTIONS:	Degreased for oxygen use. Cavity fillers. Self-flushing ball. Lever with locking system. Low ferrite stainless steel, C22 and other alloys. For more options and extras, consult IS M3H.100 – Sanitary Ball Valves Additional Options and Extras.
USE:	Clean steam, gases and liquids compatible with the construction.
AVAILABLE MODELS:	M3HP – Complete bar stock construction.
SIZES:	21/2" to 4"; DN 65 to DN 100.
CONNECTIONS:	ASME BPE, DIN or ISO clamp ferrules, tube weld (ETO) ends or a combination of both. Others on request.
PACKAGING:	Assembling and packaging in a clean room certified according to ISO 14644-1. The product is end capped and sealed with recyclable thermo-shrinkable plastic film, to avoid contamination.
INSTALLATION:	See IMI – Installation and maintenance instructions.

CE MARKING – GROUP 2 (PED – EUROPEAN DIRECTIVE)	
PN 40	**CATEGORY**
21/2" to 4" – DN 65 to 100	1 (CE Marked)

We reserve the right to change the design and material of this product without notice.

PRESSURE / TEMPERATURE LIMITS

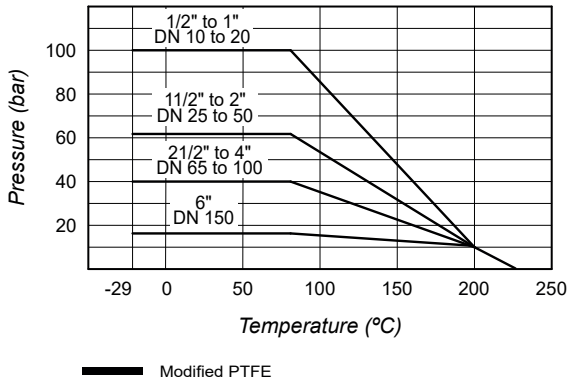

Remark: Maximum operating conditions may be limited by the valve end connections due to normative restrictions.

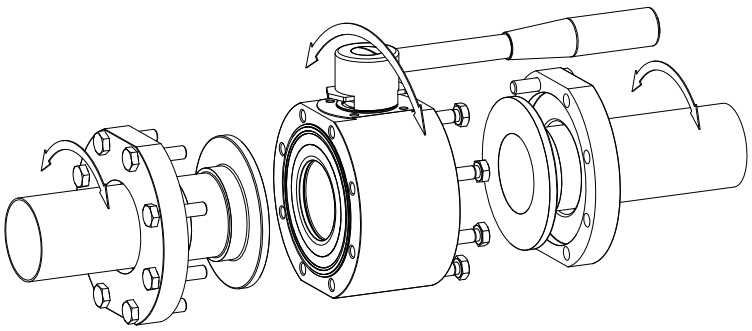

Tube weld easy and quick installation

Valves with tube weld (ETO) connections are fitted, as standard, with loose body flanges which allow installation with no need to align the end connections. After installation the valve can rotate freely 360º to the desired orientation.

LEVER OPTIONS		
ROUND LEVER	**FLAT LEVER**	**FLAT LEVER WITH LOCKING SYSTEM**
		

STEM EXTENSION UNITS *		
SEF/H	**SEF/P**	**SEF/A**
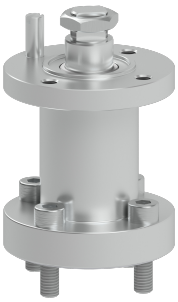	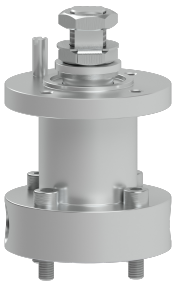	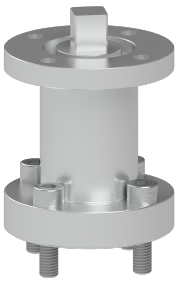

* Consult IS M3H.100 – Sanitary Ball Valves Additional Options and Extras – for further information.

We reserve the right to change the design and material of this product without notice.

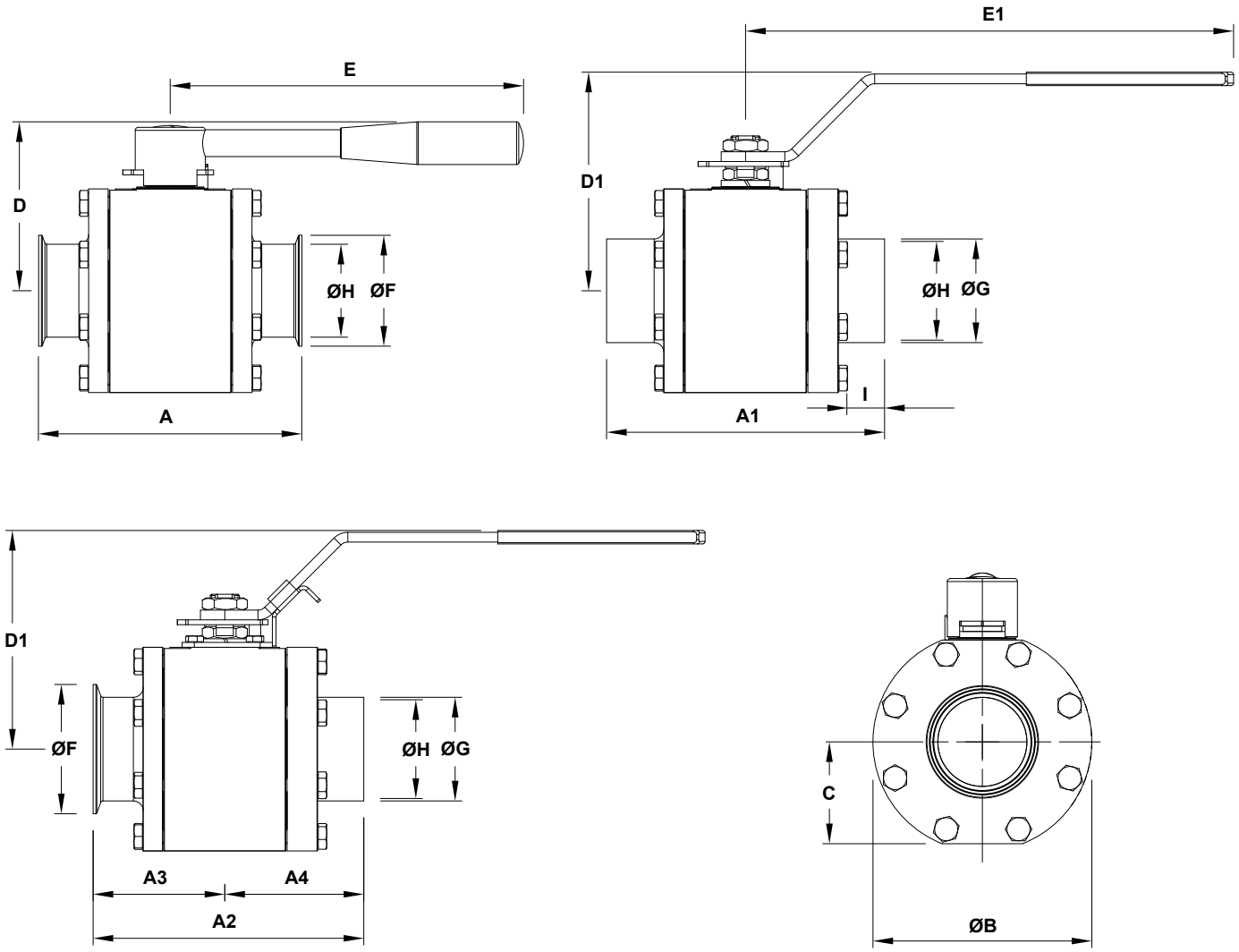

DIMENSIONS – ASME BPE (mm)																		
SIZE	A	A1	A2	A3	A4	ØB	C	D	D1	E	E1	ØF	ØG	ØH	I	BALL PORT	ISO 5211	WGT. (kg)
21/2"	190	203	196,3	95	101,5	160	72,5	130	169	250	400	77,4	63,5	60,2	29	60,2	F7	15,3
3"	216	228	222	108	114	180	83,5	140	179	290	400	90,9	76,2	72,9	30	72,9	F7	22,1
4"	254	267	260,5	127	133,5	220	101,5	158	198	290	400	118,9	101,6	97,4	36	97,4	F10	39,7

DIMENSIONS – DIN (mm)																		
SIZE	A	A1	A2	A3	A4	ØB	C	D	D1	E	E1	ØF	ØG	ØH	I	BALL PORT	ISO 5211	WGT. (kg)
DN 65	190	203	197	95	102	160	72,5	130	169	250	400	91	70	66	29	62	F7	15,4
DN 80	216	228	222	108	114	180	83,5	140	179	290	400	106	85	81	30	75	F7	22,1
DN 100	255	267	261,5	127,5	134	220	101,5	158	198	290	400	119	104	100	36	98	F10	36,4

DIMENSIONS – ISO (mm)																		
SIZE	A	A1	A2	A3	A4	ØB	C	D	D1	E	E1	ØF	ØG	ØH	I	BALL PORT	ISO 5211	WGT. (kg)
DN 65	190	203	197	95	102	160	72,5	130	169	250	400	91	76,1	72,1	29	62	F7	15,4
DN 80	216	228	222	108	114	180	83,5	140	179	290	400	106	88,9	84,3	30	75	F7	22,1
DN 100	255	267	261,5	127,5	134	220	101,5	158	198	290	400	130	114,3	109,7	36	98	F10	36,4

We reserve the right to change the design and material of this product without notice.

MATERIALS

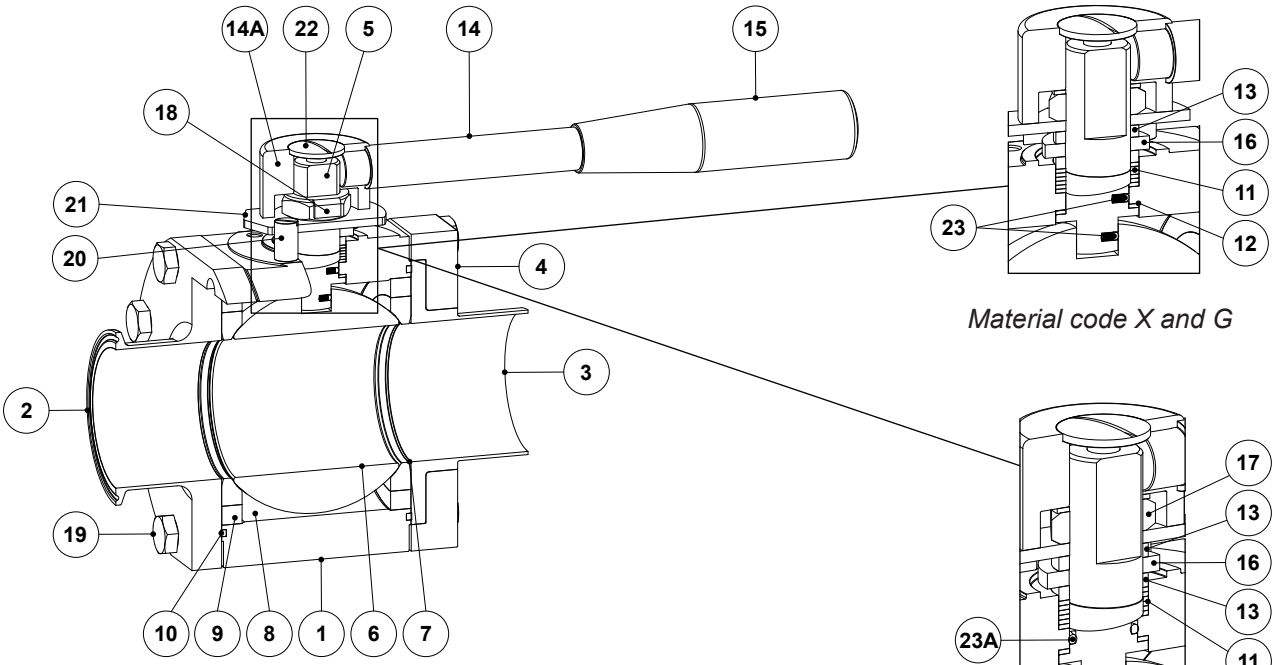

Material code X and G

Material code I and H

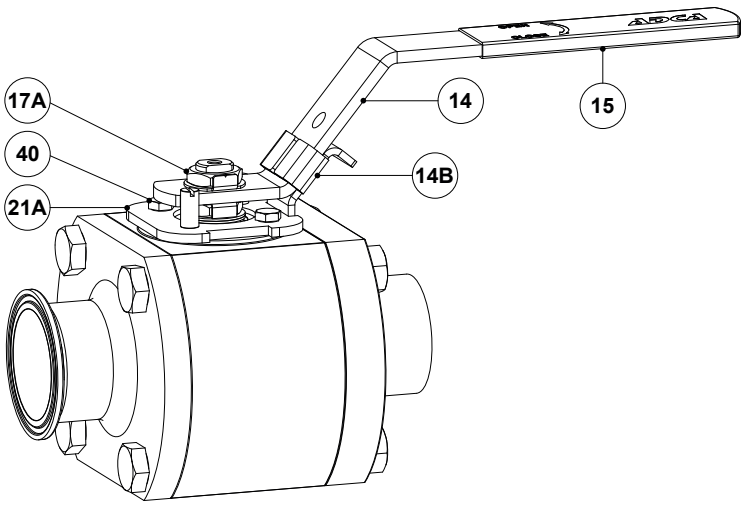

Optional flat lever with locking system

We reserve the right to change the design and material of this product without notice.

MATERIALS		
POS. No.	**DESIGNATION**	**MATERIAL**
1	Valve body	** AISI 316L / 1.4404; AISI 316L / 1.4435; Alloy C22 / 2.4601
2	Clamp ferrule end connection	** AISI 316L / 1.4404; AISI 316L / 1.4435; Alloy C22 / 2.4601
3	Tube weld end connection	** AISI 316L / 1.4404; AISI 316L / 1.4435; Alloy C22 / 2.4601
4	Flange	AISI 316L / 1.4404
5	Stem	** AISI 316L / 1.4404; AISI 316L / 1.4435; Alloy C22 / 2.4601
6	* Valve ball	** AISI 316L / 1.4404; AISI 316L / 1.4435; Alloy C22 / 2.4601
7	* Standard seat	Modified PTFE
8	* Cavity filler seat	Modified PTFE
9	Body ring	** AISI 316L / 1.4404; AISI 316L / 1.4435; Alloy C22 / 2.4601
10	* Body seal	PTFE
11	* Stem seal	Modified PTFE
12	* Stem thrust seal	Modified PTFE
13	* Spacer	AISI 316L / 1.4404
14	Handle	AISI 304 / 1.4301
14A	Handle body	AISI 304 / 1.4301
14B	Locking piece	AISI 304 / 1.4301
15	Handle end	Vinyl; AISI 304 / 1.4301
16	Spring washer	Stainless steel A2
17	Compression nut	AISI 304 / 1.4301
17A	Nut	AISI 304 / 1.4301
18	Lock washer	AISI 304 / 1.4301
19	Body fixing bolt	Stainless steel A2-70
20	Stop pin	AISI 304 / 1.4301
21	Handle stopper	AISI 304 / 1.4301
21A	Locking flange	AISI 304 / 1.4301
22	Handle fixing bolt	AISI 304 / 1.4301
23	Antistatic device	AISI 316 / 1.4401
23A	* O-ring	** FPM; FFKM
40	Fixing bolt	Stainless steel A2-70

* Available spare parts; ** Others on request.
Remarks: FDA / USP Class VI seals certificate on request.
All valves have a serial number. In case of non-standard valves, this number must be supplied if spare parts are ordered.

We reserve the right to change the design and material of this product without notice.

ORDERING CODES M3HP											
VALVE MODEL	**MHP**	**X**	**X**	**X**	**F**	**X**	**X**	**CD**	**X**	**100**	
M3HP – Three piece ball valve	**MHP**										
LEVER HANDLE											
Round lever in stainless steel with plastic end		**X**									
Round lever with complete stainless steel construction		**1**									
Flat lever in stainless steel with plastic cover		**2**									
Flat lever in stainless steel with plastic cover and locking system		**3**									
Bare stem		**9**									
MATERIAL											
AISI 316L / 1.4404			**X**								
AISI 316L / 1.4404 with end connections in AISI 316L / 1.4435 **(a)**			**G**								
AISI 316L / 1.4435			**I**								
Alloy C22 / 2.4602			**H**								
SEAT DESIGN											
Standard seats				**X**							
Cavity fillers				**F**							
SEAT MATERIAL											
Modified PTFE					**F**						
SURFACE FINISH (b)											
Standard surface finish						**X**					
Mirror mechanical polished external surfaces (SF1)						**P**					
Electropolished internal wetted parts (SF5)						**E**					
SPECIAL FEATURES											
None							**X**				
Degreased for oxygen							**O**				
PIPE CONNECTIONS											
Clamp ferrule ASME BPE								**CB**			
Clamp ferrule DIN (DIN 32676-A)								**CD**			
Clamp ferrule ISO (DIN 32676-B)								**CI**			
Tube weld (ETO) according to ASME BPE								**TB**			
Tube weld (ETO) according to DIN 11866-A (DIN 11850-2)								**TD**			
Tube weld (ETO) according to DIN 11866-B (ISO 1127)								**TI**			
TC/ETO combination ASME BPE								**CTB**			
TC/ETO combination DIN 32676-A / DIN 11866-A								**CTD**			
TC/ETO combination DIN 32676-B / DIN 11866-B								**CTI**			
BALL PORT											
Standard ball / true bore (ASME BPE) or full bore (DIN and ISO)									**X**		
Self-flushing ball / true bore (ASME BPE) or full bore (DIN and ISO)									**F**		
SIZE											
21/2" or DN 65										**65**	
3" or DN 80										**80**	
4" or DN 100										**100**	
SPECIAL CONSTRUCTION / ADDITIONAL OPTIONS											
Full description or additional codes have to be added in case of a non standard combination											**E**

(a) Only available with tube weld (ETO) ends.
(b) Consult TIS.GIA – General information ADCAPure – for further details and other surface finish options.

We reserve the right to change the design and material of this product without notice.