FLOAT AND THERMOSTATIC STEAM TRAPS
FLT314TW

DESCRIPTION

The ADCA FLT314TW is a series of high capacity float and thermostatic steam traps with integral air vent, designed for modulating discharge of condensate to ensure maximum system heat transfer.
Specially designed for applications where continuous drainage is essential and high loads are involved.





MAIN FEATURES

High capacity.
Modulating discharge of condensate at steam temperature.
Unaffected by sudden or wide load and pressure variations.
No backing-up with condensate.
Excellent air discharge through its integrated thermostatic air vent.

OPTIONS: Stainless steel construction.
Equalizing (vent) and drain connections.
HVV – Hand vent valve.
BDV – Blowdown valve.
AFZ – Anti-freeze device.
VB21M – Vacuum breaker.

USE: Saturated and superheated steam.

AVAILABLE MODELS: FLT314STW – carbon steel.

SIZES: 3"; DN 80.

CONNECTIONS: Flanged EN 1092-1 PN 16.
Flanged ASME B16.5 Class 150.

INSTALLATION: Horizontal installation.
See IMI – Installation and maintenance instructions.

CE MARKING – GROUP 2 (PED – EUROPEAN DIRECTIVE)	
PN 16	**CATEGORY**
3" – DN 80	2 (CE marked)

BODY LIMITING CONDITIONS *	
FLANGED PN 16 / CLASS 150 **ALLOWABLE PRESSURE**	**RELATED TEMPERATURE**
14,8 bar	100 ºC
13,3 bar	200 ºC
12,1 bar	250 ºC
11 bar	300 ºC

PMO – Maximum operating pressure: 12 bar.
TMO – Maximum operating temperature: 250 ºC.
Minimum operating temperature: -10 ºC.
* According to EN 1092-1:2018.

We reserve the right to change the design and material of this product without notice.

FLOW RATE CAPACITY (kg/h)																	
MODEL	SIZE	DIFFERENTIAL PRESSURE (bar)															
		0,1	0,3	0,5	1	1,5	2	2,5	3	3,5	4	5	6	7	8	10	12
FLT314STW	3" – DN 80	37600	45400	49000	58000	62000	68000	74000	76000	79000	84000	87000	91000	94000	96000	99000	100000

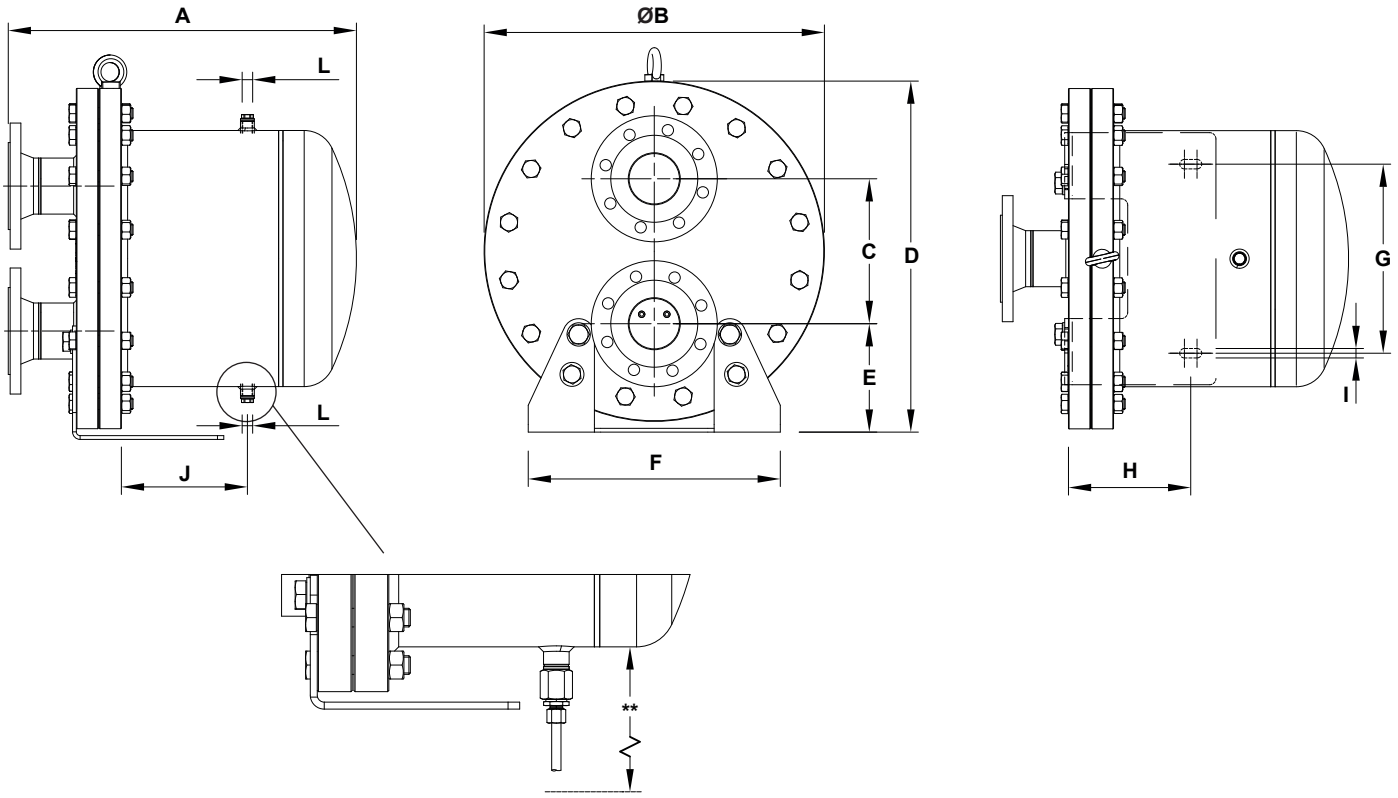

DIMENSIONS (mm)														
MODEL	SIZE	PN 16											CLASS 150	WGT. (kg)
		A	ØB	C	D	E	F	G	H	I	J	L *	A	
FLT314STW	3" – DN 80	552	540	230	557	172	400	300	194	15	200	3/8"	572	160

* As standard, in versions with EN flanges, this connection is female threaded ISO 228. In versions with ASME flanges, this connection is female threaded NPT.

** In case an optional accessory is to be installed on the drain connection ensure there is enough clearance below the unit. A higher supporting frame can be supplied on request.

We reserve the right to change the design and material of this product without notice.

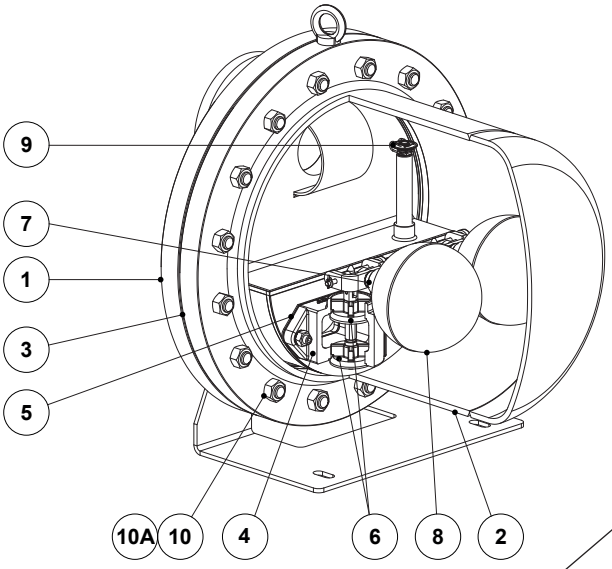

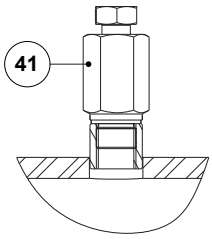

Optional hand vent valve (HVV)

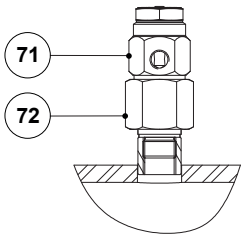

Optional vacuum breaker (VB21M)

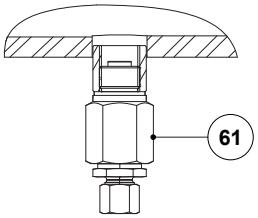

Optional anti-freeze device (AFZ); Automatic

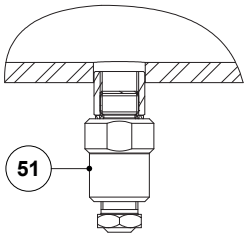

Optional blowdown valve (BDV); Manual

MATERIALS		
POS. No.	**DESIGNATION**	**MATERIAL**
1	Body	P250GH / 1.0460; P235GH / 1.0345; S355J2 / 1.0577; S235JR / 1.0038
2	Cover	P265GH / 1.0425; P250GH / 1.0460; P235GH / 1.0345; S355J2 / 1.0577; AIO5 / 1.0432
3	* Gasket	Stainless steel / Graphite
4	* Seat	A351 CF8M / 1.4408
5	* Gasket	Stainless steel / Graphite
6	* Valve	CA-40 / 1.4027; AISI 410 / 1.4006
7	* Lever	AISI 316 / 1.4401; AISI 304 / 1.4301
8	* Float	AISI 304 / 1.4301
9	* Automatic air vent	Stainless steel (thermostatic)
10	Bolt	Steel 8.8
10A	Nut	Steel 8.8
41	Hand vent valve	AISI 303 / 1.4305; AISI 316L / 1.4404
51	Blowdown valve	AISI 303 / 1.4305; AISI 316L / 1.4404
61	Anti-freeze device	AISI 303 / 1.4305; AISI 316L / 1.4404
71	Vacuum breaker	AISI 303 / 1.4305
72	Adapter fitting	AISI 303 / 1.4305

* Available spare parts.

We reserve the right to change the design and material of this product without notice.