ELECTRIC ON/OFF GLOBE VALVES
EV15
(ASME)

DESCRIPTION

The ADCATrol EV15 is a series of single seated, two-way electric on/off globe valves with electric actuator. These valves are suitable for use with the most common process fluids such as steam, water, superheated water, air, neutral gases and oils.



MAIN FEATURES

Easy to service.
Compact and cost-effective.
Ambient temperature from -10 to 60 ºC (others on request).
24 V AC, 115 V AC, 230 V AC, 400 V AC 50/60 Hz and 24 V DC supply voltages.
Manual operation with disengagement of the actuator motor.
Valve protection against excessive force due to load-dependent seating.
Defined closing force at the end positions leading to tight valve shutoff.
Mechanical stroke indication via anti-rotation bar.

OPTIONS AND ACCESSORIES:	Limit switches. Heating resistor.
USE:	Saturated steam. Hot and superheated water. Air, gases and others.
AVAILABLE MODELS:	EV15S – carbon steel. EV15i – stainless steel.
SIZES:	1/2" to 6".
CONNECTIONS:	Flanged ASME B16.5 Class 150 or 300.



CE MARKING – GROUP 2 (PED – EUROPEAN DIRECTIVE)		
CLASS 150	**CLASS 300**	**CATEGORY**
1/2" to 2"	1/2" to 1"	SEP
21/2" to 6"	11/2" to 4"	1 (CE marked)
–	6"	2 (CE marked)

We reserve the right to change the design and material of this product without notice.

BODY LIMITING CONDITIONS *

EV15S				EV15i			
CLASS 150		CLASS 300		CLASS 150		CLASS 300	
ALLOW. PRESS.	RELAT. TEMP.	ALLOW. PRESS.	RELAT. TEMP.	ALLOW. PRESS.	RELAT. TEMP.	ALLOW. PRESS.	RELAT. TEMP.
19,3 bar	-10 / 50 ºC	50 bar	-10 / 50 ºC	18,4	-10 / 50 ºC	48,1	-10 / 50 ºC
15,8 bar	150 ºC	43,9 bar	200 ºC	14,4	200 ºC	35,8	200 ºC
12,1 bar	250 ºC	36,9 bar	350 ºC	12	350 ºC	30,4	350 ºC
8,4 bar	350 ºC	34,6 bar	400 ºC	8,4	400 ºC	29,3	400 ºC

* Rating according to EN 1759-1:2004.

BONNET DESIGN

STANDARD	EXTENDED
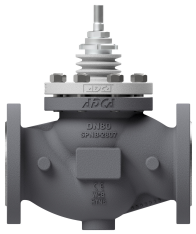	
-10 ºC to 250 ºC	Above 250 ºC

STEM SEALING

PTFE/GR V-RINGS (V1.2)	PTFE V-RINGS (V2.2)	EPDM (EP1)	GRAPHITE (G1)	BELLOWS	
				(BV1)	(BG1)
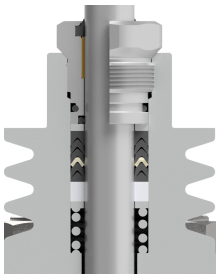	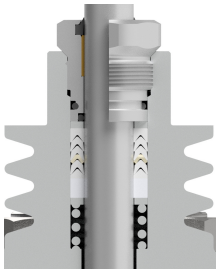	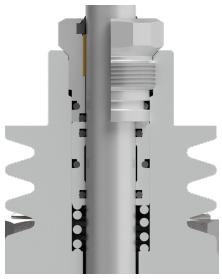	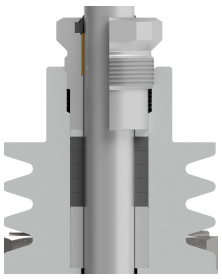	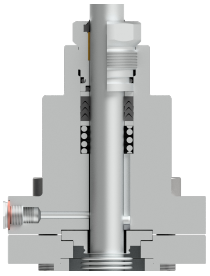	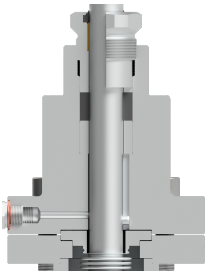
-10 to 220 ºC	-10 to 180 ºC	-10 to 150 ºC *	-10 to 400 ºC	- 60 to 220 ºC **	- 60 to 400 ºC **

* Up to 180 ºC in steam and hot water applications; ** Maximum operating pressure: 25 bar.

PLUG DESIGN

PARABOLIC	PARABOLIC (SOFT SEALING)
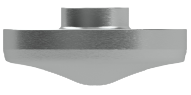	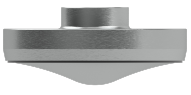
Sealing: Metal to metal **Characteristic:** Quick-opening (On/Off) **Flow direction:** From below **Leakage:** Class V, acc. to IEC 60534-4	**Sealing:** PTFE/GR **Characteristic:** Quick-opening (On/Off) **Flow direction:** From below **Leakage:** Class VI, acc. to IEC 60534-4 **Max. temp.:** 200 ºC

FLOW RATE COEFFICIENTS (m^3/h)

SIZES	1/2"	3/4"	1"	11/2"	2"	21/2"	3"	4"	6"
Kvs	5,1	6,3	10	25	40	63	100	160	370
SEAT Ø (mm)	19,2	19,2	25	38	48	65	76	96	150
STROKE (mm)	5	8	8	10	12,5	20	20	25	38

For conversion Kvs = Cv (US) x 0,865.

We reserve the right to change the design and material of this product without notice.

EV15 – FTO, UNBALANCED TRIM					
VALVE SIZE	ACTUATOR MODEL	MAXIMUM PERMISSIBLE PRESSURE DROP (bar) *			
		SOFT SEALING (CLASS VI)		METAL SEALING (CLASS V)	
		PTFE	GRAPHITE	PTFE	GRAPHITE
1/2"	EL12	50	50	40,9	35,1
	EL20	50	50	50	50
3/4"	EL12	50	50	23,2	19,6
	EL20	50	50	45,3	41,7
1"	EL12	17,8	15,7	12,2	10,1
	EL20	30,8	28,8	25,2	23,1
	EL45	50	50	50	50
11/2"	EL12	7,5	6,6	3,8	2,9
	EL20	13,2	12,3	9,5	8,6
	EL45	30,8	29,9	27,1	26,2
	EL80	50	50	50	50
2"	EL20	8,2	7,6	5,2	4,7
	EL45	19,2	18,7	16,3	15,7
	EL80	50	50	49,5	48,9
21/2"	EL20	4,4	4,1	2,2	1,9
	EL45	10,4	10,1	8,2	7,9
	EL80	18,8	18,5	16,7	16,4
	EL120	28,5	28,2	26,3	26
21/2" M16x1,5	SA07.2	31,6	31,1	29,4	28,9
	SA07.6	50	49,7	47,9	47,5
	EL250	50	50	50	50
3"	EL45	7,6	7,4	5,7	5,5
	EL80	13,7	13,5	11,9	11,7
	EL120	20,8	20,6	19	18,7
3" M16x1,5	SA07.2	23	22,7	21,2	20,9
	SA07.6	36,6	36,3	34,8	34,4
	EL250	43,7	43,3	43,7	43,3
	SA10.2	50	50	50	50
4"	EL45	4,7	4,6	3,2	3,1
	EL80	8,6	8,4	7,1	7
	EL120	13	12,9	11,5	11,4
4" M16x1,5	SA07.2	14,4	14,2	12,9	12,7
	SA07.6	22,9	22,7	21,4	21,2
	EL250	27,3	27,1	25,9	25,7
	SA10.2	34,6	34,4	33,2	32,9
6"	EL80	3,5	3,4	2,5	2,4
	EL120	5,3	5,2	4,3	4,2
	SA07.2	5,9	5,8	4,9	4,8
	SA07.6	9,3	9,3	8,4	8,3
	EL250	11,1	11,1	10,2	10,1
	SA10.2	17,3	17,2	16,4	16,3

* “PTFE” specified pressure drops are applicable in case of V-ring and O-ring stem seals independently of the material.
“GRAPH.” specified pressure drops are applicable in case of graphite and bellow stem seals.

We reserve the right to change the design and material of this product without notice.

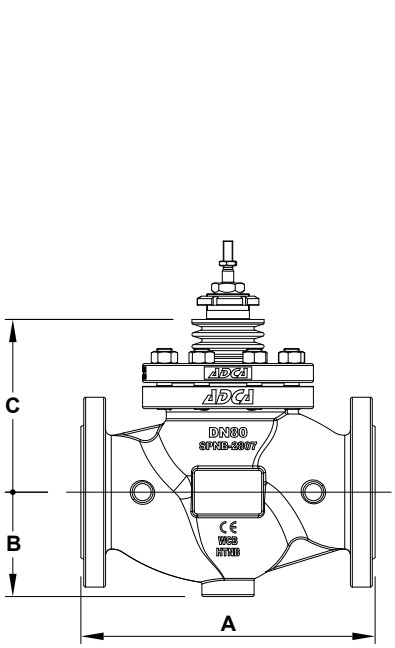

Valve with standard bonnet

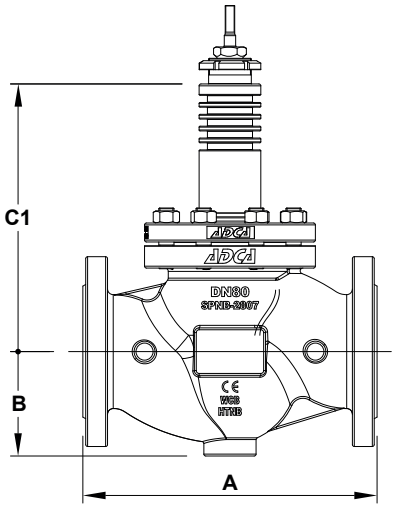

Valve with extended bonnet

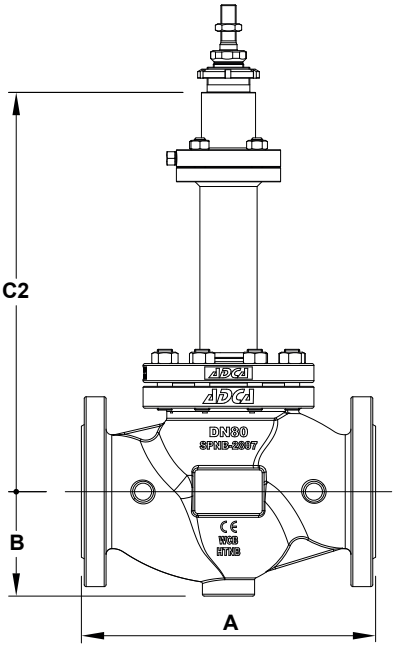

Bellows sealed valve

DIMENSIONS (mm)

DIMENSION		SIZE								
		1/2"	3/4"	1"	11/2"	2"	21/2"	3"	4"	6"
A	CLASS 150	184 **(a)**	184 **(a)**	184	222	254	276	298	352	451
	CLASS 300	190 **(a)**	194 **(a)**	197	235	267	292	318	368	473
B	CLASS 150	44,5	49	54	65	85	100	110	130	182
	CLASS 300	47,5	58,5	62	78	85	100	110	130	182
C		85	85	90	115	125	176	175	190	216
C1		150	150	170	195	204	276	275	310	320
C2		314	314	322	317	317	415	442	451	590

(a) With welded-on flanges.

WEIGHTS (kg)

		SIZE								
		1/2"	3/4"	1"	11/2"	2"	21/2"	3"	4"	6"
STANDARD	CLASS 150	4,5	5	6,1	11,1	15,2	30,9	36,5	52,5	103,1
	CLASS 300	4,9	6	7,5	13,9	17,5	34	41,9	60,5	119,3
EXTENDED	CLASS 150	5,2	5,7	6,8	12,4	16,4	31,6	37	53,2	109,8
	CLASS 300	5,6	6,7	8,2	15,2	18,7	34,7	42,5	61,2	121,1
BELLOWS	CLASS 150	8,7	9,2	10,2	15,1	19	34,7	39,5	55,6	114,8
	CLASS 300	9,1	10,2	11,6	17,9	21,3	37,8	45,5	63,5	126,1

We reserve the right to change the design and material of this product without notice.

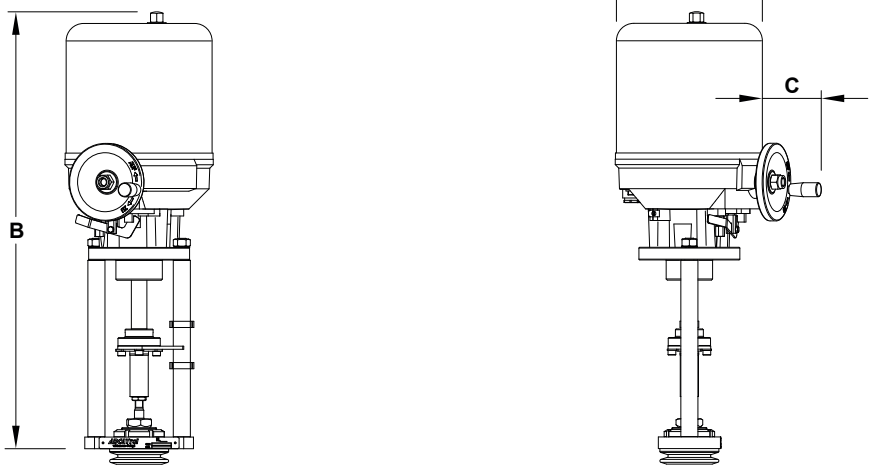

DIMENSIONS – EL SERIES ELECTRIC ACTUATORS (mm)						
DIMENSION	**EL12**	**EL20**	**EL45**	**EL80**	**EL120**	**EL250**
ØA	129	148	148	188	188	216
B	315	474	474	572	572	668
C	–	42	42	70	70	70
WEIGHT (kg)	2,1	8	8	13	13	19

For more information, please consult IS EL.012 – Linear electric actuators.

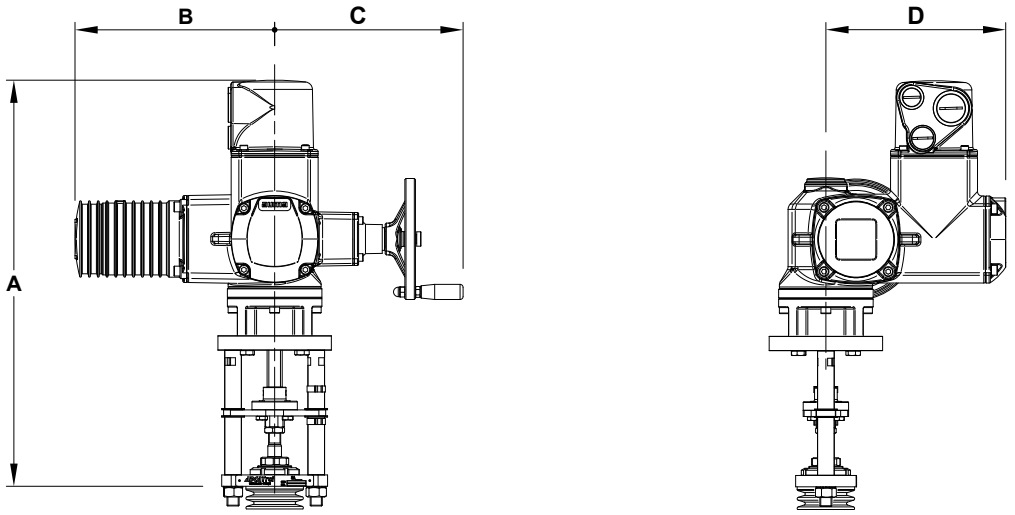

DIMENSIONS – SA SERIES ELECTRIC ACTUATORS (mm)			
DIMENSION	**SA07.2**	**SA07.6**	**SA10.2**
A	539 **(a)** 548 **(b)**	539 **(a)** 548 **(b)**	583 **(a)** 539 **(b)**
B	283	283	283
C	254	254	254
D	248	248	248
WEIGHT (kg)	25,4 **(a)** 26,8 **(b)**	27,9 **(a)** 31,2 **(b)**	30 **(a)** 33,2 **(b)**

(a) 21/2" to 4"; **(b)** 6".
For more information, please consult the manufacturer.

We reserve the right to change the design and material of this product without notice.

MATERIALS

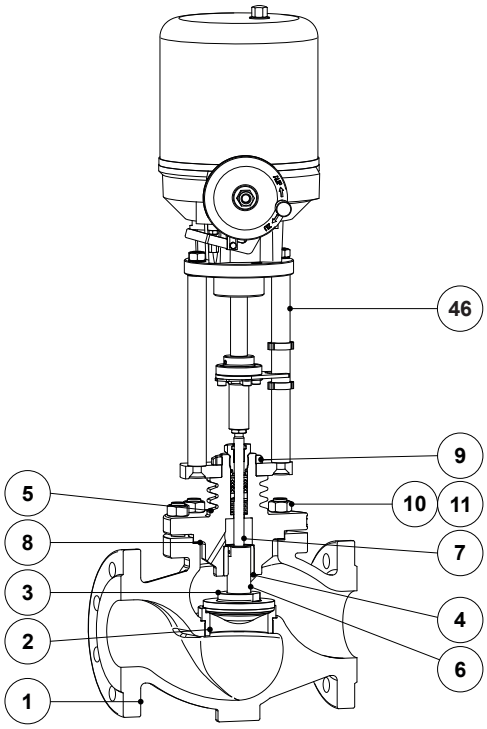

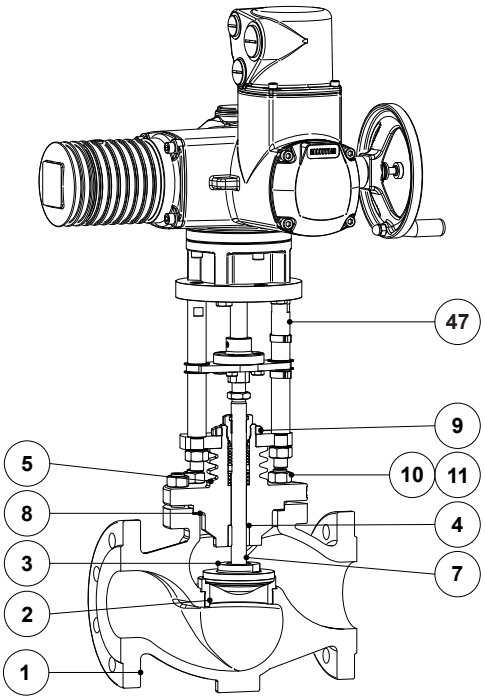

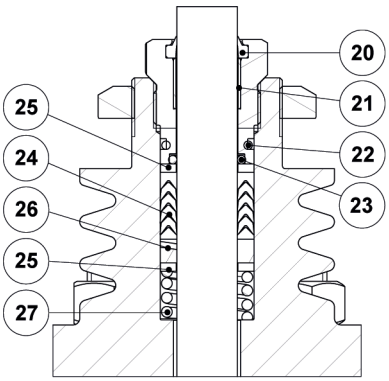

PTFE/GR V-Rings
(V1.2)

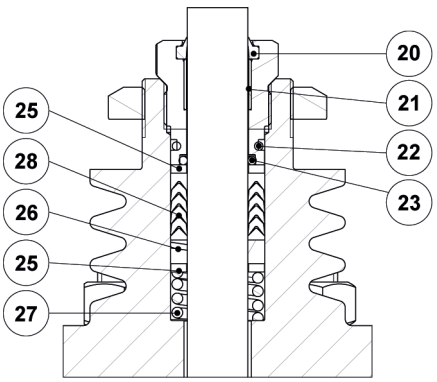

PTFE V-Rings
(V2.2)

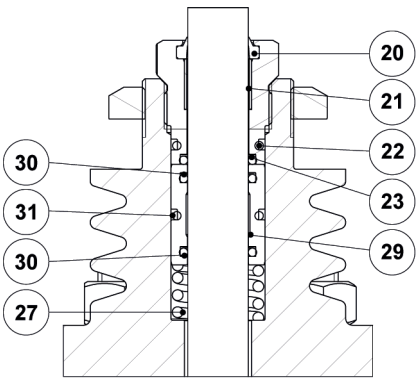

EPDM
(EP1)

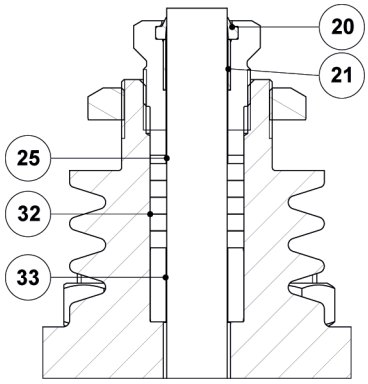

Graphite
(G1)

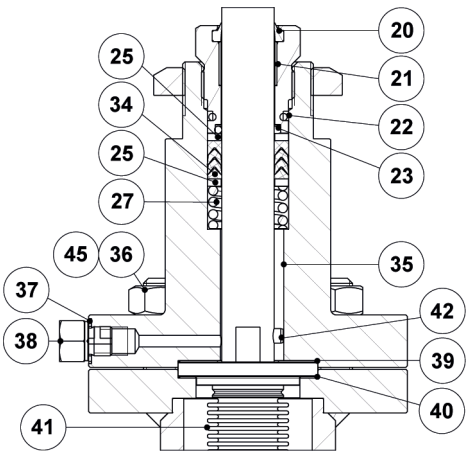

Bellows sealing
(BV1)

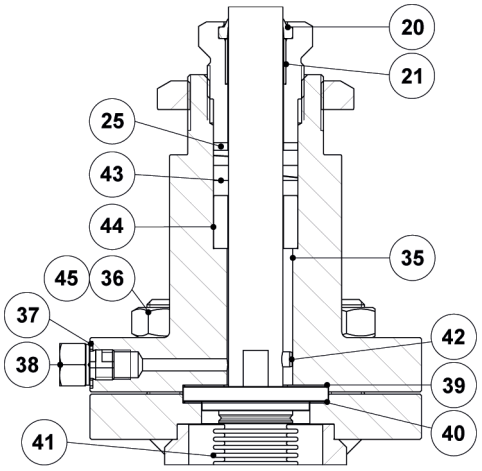

Bellows sealing
(BG1)

We reserve the right to change the design and material of this product without notice.

MATERIALS		
POS. No.	**DESIGNATION**	**MATERIAL**
1	Valve body (EV15S)	A216 WCB / 1.0619
	Valve body (EV15i)	A351 CF8M / 1.4408
2	* Seat	AISI 316L / 1.4404
3	* Valve plug	AISI 316L / 1.4404
4	Stem guide	** Bronze CB1
5	Bonnet (EV15S)	A351 CF8M / 1.4408; A216 WCB / 1.0619
	Bonnet (EV15i)	A351 CF8M / 1.4408
6	* Post stem (21/2" to 4")	AISI 316L / 1.4404
7	* Stem	AISI 316L / 1.4404
8	* Gasket	Stainless steel / Graphite
9	Lock nut	A351 CF8 / 1.4308
10	Nut (EV15S)	EN 10269 steel
	Nut (EV15i)	Stainless steel A2-70
11	Stud (EV15S)	EN 10269 steel
	Stud (EV15i)	Stainless steel A2-70
12	* Packing nut	AISI 303 / 1.4305
13	Lock nut	AISI 304 / 4.4301
20	* Scraper ring	FPM; NBR
21	* Plain bearing	Bronze / PTFE
22	* O-ring	EPDM
23	* O-ring	FPM
24	* Chevron packing set	PTFE; Graphite filled PTFE
25	Washer	AISI 304 / 1.4301
26	* Stem guide	Stainless steel filled PTFE
27	* Spring	AISI 302 / 1.4310
28	* Chevron packing set	PTFE
29	O-ring guide	AISI 304 / 1.4301
30	* O-ring	EPDM
31	* O-ring	EPDM
32	* Packing set	Expanded graphite
33	Packing spacer	AISI 304 / 1.4301
34	* Safety packing set	Graphite filled PTFE
35	Bellows bonnet (EV15S)	A105 / 1.0432; AISI 316 / 1.4401
	Bellows bonnet (EV15i)	AISI 316 / 1.4401
36	Stud (EV15S)	EN 10269 steel
	Stud (EV15i)	Stainless steel A2-70
37	Gasket	Copper
38	Compression fitting	AISI 316 / 1.4401
39	* Gasket	Stainless steel / Graphite
40	* Gasket	Stainless steel / Graphite
41	* Metal bellows	AISI 316Ti / 1.4571
42	* Locking pin	AISI 303 / 1.4305
43	* Safety packing set	Expanded graphite
44	Packing spacer	AISI 304 / 1.4301
45	Nut (EV15S)	EN 10269 steel
	Nut (EV15i)	Stainless steel A2-70
46	EL Linear electric actuator	See IS EL.012 – Linear electric actuators
47	SA Linear electric actuator	Consult manufacturer

* Available spare parts; ** Others on request.

We reserve the right to change the design and material of this product without notice.

ORDERING CODES EV15

VALVE MODEL	E15	1	S	U	1	2	012	1	X	U	015	
EV15 – Electric on/off globe valve, two-way, straight body	**E15**											
VALVE SERIES												
Series 1 (1/2" to 4")		**1**										
Series 2 (21/2" to 4" / M16x1,5; 6")		**2**										
BODY MATERIAL												
A216 WCB / 1.0619 carbon steel			**S**									
A351 CF8M / 1.4408 stainless steel			**I**									
FLOW DIRECTION												
Flow under the plug				**U**								
STEM SEALING												
PTFE/GR V-Rings (V1.2)					**1**							
Virgin PTFE V-Rings (V2.2)					**2**							
Graphite (G1)					**3**							
EPDM (EP1)					**4**							
Graphite (G1) with extended bonnet					**6**							
Stainless steel bellows with PTFE/GR safety packing (BV1)					**8**							
Stainless steel bellows with graphite safety packing (BG1)					**9**							
VALVE SEALING												
Metal to metal (Class V)						**2**						
Soft sealed with PTFE/GR (Class VI)						**3**						
ACTUATOR MODEL												
EL12							**012**					
EL20							**020**					
EL45							**040**					
EL45.1							**041**					
EL45.2							**042**					
EL80							**080**					
EL80.1							**081**					
EL80.2							**082**					
EL120							**120**					
EL120.1							**121**					
EL120.2							**122**					
EL250							**250**					
EL250.1							**251**					
EL250.2							**252**					
SA07.2							**072**					
SA07.6							**076**					
SA10.2							**102**					
Without actuator **(a)**							**XXX**					
SUPPLY VOLTAGE												
230 V AC 50/60 Hz								**1**				
115 V AC 50/60 Hz								**2**				
24 V AC 50/60 Hz **(b)**								**3**				
24 V DC								**4**				
400 V AC 3 ~ 50/60 Hz								**5**				
Without actuator **(a)**								**X**				
LIMIT SWITCHES												
Without additional limit switches									**X**			
FG teletransmitter assembly with one additional WE limit switch **(b)**									**1**			
FG teletransmitter assembly with two additional WE limit switches **(b)**									**2**			
PIPE CONNECTIONS												
Flanged ASME B16.5 Class 150										**U**		
Flanged ASME B16.5 Class 300										**V**		
SIZE												
1/2"											**015**	
3/4"											**020**	
...												
SPECIAL CONSTRUCTION / ADDITIONAL OPTIONS												
A full description must to be provided and validated in case of a non-standard construction												**E**

(a) Valve supplied without actuator. Actuator code must be specified separately e.g.: E151SU13XXXXXU050 fitted with ELS20X1C5XXXA1 actuator.
(b) Only available with EL actuators. SA actuators already include additional limit switches for monitorization purposes.
Remark: Options and accessories not mentioned in the ordering codes table must be requested separately, e.g.: E151SU130401XU040 fitted with HZ/WP heating resistor with thermoswitch.

We reserve the right to change the design and material of this product without notice.