FLOAT AND THERMOSTATIC STEAM TRAPS
FLT22

DESCRIPTION

The ADCA FLT22 is a series of high capacity float and thermostatic steam traps with integral air vent, designed for modulating discharge of condensate to ensure maximum system heat transfer.
Specially designed for applications where continuous drainage is essential and high loads are involved.



MAIN FEATURES

High capacity.
Modulating discharge of condensate at steam temperature.
Unaffected by sudden or wide load and pressure variations.
No backing-up with condensate.
Excellent air discharge through its integrated air vent.

USE: Saturated and superheated steam.



AVAILABLE MODELS: FLT22S-4,5, FLT22S-10, FLT22S-14 and FLT22S-21 – carbon steel.
FLT22SS-4,5, FLT22SS-10, FLT22SS-14 and FLT22SS-21 – stainless steel.

SIZES: 11/2" and 2"; DN 40 and DN 50.

CONNECTIONS: Female threaded ISO 7 Rp or NPT.
Flanged EN 1092-1 PN 25.
Flanged ASME B16.5 Class 150 or 300.

INSTALLATION: Horizontal installation from right to left (R-L).
Horizontal installation from left to right (L-R) or vertical from top to bottom (V), on request.
See IMI – Installation and maintenance instructions.

ΔPMX: FLT22S-4,5 – 4,5 bar
FLT22S-10 – 10 bar
FLT22S-14 – 14 bar
FLT22S-21 – 21 bar
Remark: The same figures are valid for the FLT22SS.

CE MARKING – GROUP 2 (PED – EUROPEAN DIRECTIVE)	
PN 25	**CATEGORY**
11/2" and 2" – DN 40 and 50	1 (CE marked)

BODY LIMITING CONDITIONS

FLT22S		FLT22SS		RELATED TEMPERATURE
FLANGED PN 25 / CLASS 300 *	FLANGED CLASS 150 **	FLANGED PN 25 / CLASS 300 *	FLANGED CLASS 150 **	
ALLOWABLE PRESSURE	ALLOWABLE PRESSURE	ALLOWABLE PRESSURE	ALLOWABLE PRESSURE	
23,2 bar	15,4 bar	23,6 bar	15,3 bar	100 ºC
20,8 bar	13,8 bar	19,8 bar	11,1 bar	200 ºC
19 bar	12,1 bar	18,6 bar	10,2 bar	250 ºC
17,2 bar	10,2 bar	17,2 bar	9,7 bar	300 ºC

PMO – Maximum operating pressure: 21 bar; TMO – Maximum operating temperature: 250 ºC.
* According to EN 1092-1:2018; ** According to EN 1759-1:2004.
Body limiting conditions PN 25 or below, depending on the type of connection adopted. Rating PN 25 for threaded connections.

We reserve the right to change the design and material of this product without notice.

FLOW RATE CAPACITY (kg/h)													
MODEL	SIZE	DIFFERENTIAL PRESSURE (bar)											
		0,5	0,7	1	1,5	2	4,5	7	10	12	14	16	21
FLT22S-4,5	11/2" – DN 40	2400	2800	3400	3900	4500	7300	–	–	–	–	–	–
FLT22S-10	11/2" – DN 40	1500	1750	2000	2600	3000	4000	5400	6200	–	–	–	–
FLT22S-14	11/2" – DN 40	950	1100	1300	1600	1800	2600	3250	3900	4210	4950	–	–
FLT22S-21	11/2" – DN 40	950	1100	1300	1600	1800	2600	3250	3900	4210	4950	5000	5600
FLT22S-4,5	2" – DN 50	7550	9050	11000	14000	15500	22500	–	–	–	–	–	–
FLT22S-10	2" – DN 50	3900	4450	5000	6100	7100	10000	13750	16000	–	–	–	–
FLT22S-14	2" – DN 50	1900	2300	2700	3100	3600	5000	6900	8100	9000	9800	–	–
FLT22S-21	2" – DN 50	1900	2300	2700	3100	3600	5000	6900	8100	9000	9800	10000	12050

Remark: The same figures are valid for the FLT22SS.

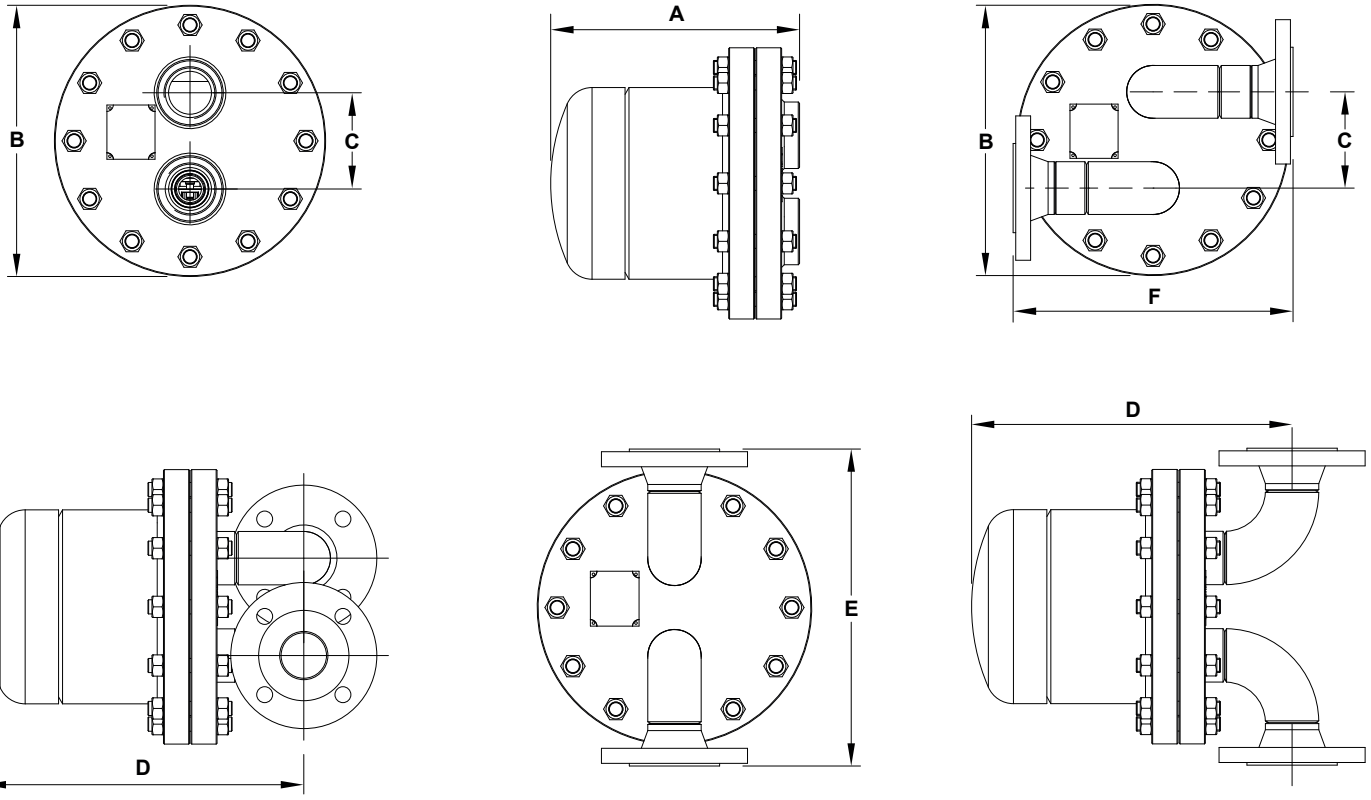

DIMENSIONS (mm)																
SIZE	THREADED				PN 25				CLASS 150				CLASS 300			
	A	B	C	WGT. (kg)	D	E	F	WGT. (kg)	D	E	F	WGT. (kg)	D	E	F	WGT. (kg)
11/2" – DN 40	290	310	110	41	355	320	320	43	355	320	320	47	355	320	320	50
2" – DN 50	290	310	110	42	355	360	320	45	355	390	350	50	355	403	365	52

We reserve the right to change the design and material of this product without notice.

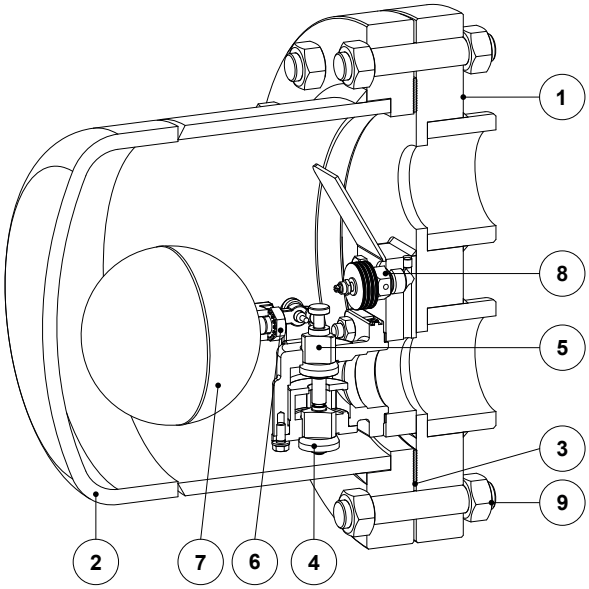

MATERIALS			
POS. No.	**DESIGNATION**	**FLT22S**	**FLT22SS**
1	Body	P250GH / 1.0460; P235GH / 1.0345; S355JR / 1.0045; S235JR / 1.0038	AISI 316 / 1.4401; AISI 304 / 1.4301
2	Cover	P235GH / 1.0345; P265GH / 1.0425; S355JR / 1.0045	AISI 316 / 1.4401; AISI 304 / 1.4301
3	* Gasket	Graphite	Graphite
4	* Seat	A351 CF8 / 1.4308	A351 CF8 / 1.4308
5	* Valve	AISI 420 / 1.4021	AISI 420 / 1.4021
6	* Lever	AISI 304 / 1.4301	AISI 304 / 1.4301
7	* Float	AISI 304 / 1.4301	AISI 304 / 1.4301
8	* Air vent	Stainless steel (bimetallic)	Stainless steel (bimetallic)
9	Bolt	Steel 8.8	Stainless steel A2-70

* Available spare parts.

We reserve the right to change the design and material of this product without notice.