PILOT OPERATED PRESSURE REDUCING VALVES
PRV57 and PRS57

DESCRIPTION

The ADCA PRV57 pilot operated pressure reducing valves are designed for use with steam, compressed air, nitrogen, and other gases compatible with the construction materials.
The PRV57 can be installed in pressure reducing stations throughout all industries, and provide sensitive and accurate control even when inlet pressure fluctuations or relevant flow variations occur.



MAIN FEATURES

Precise control of downstream pressures from 0,07 bar to 17 bar.
Robust steel or stainless steel construction.
Suitable for dead end conditions.
Guided piston and valve stem.
Hardened plug.

OPTIONS:
Soft sealing.
Low pressure diaphragm.
Dome-loading.
Top cap (adjustment screw with cover).
Bottom cover drain connection.
Stellited plug and seat.
Internal sensing line.



USE:
Saturated steam, compressed air, and other gases compatible with the construction (except oxygen).

AVAILABLE MODELS:
PRV57, PRV57E – steel versions for steam.
PRV57i, PRV57iE – stainless steel versions for steam (only available from DN 15 to DN 50).
PRV57G, PRV57GE – steel versions for compressed air and gases.
PRV57Gi, PRV57GiE – stainless steel versions for compressed air and gases (only available from DN 15 to DN 50).
Suffix E: Version with solenoid valve for remote closure.
PRS: All models above are available with an optional sustaining valve pilot, e.g. PRS57G.

SIZES:
DN 15 to DN 100.

CONNECTIONS:
Flanged EN 1092-1 PN 16 or PN 40.
Flanged ASME B16.5 Class 150 on request (drilled from EN casting).
Standard PN 16 DN 65 flanges are supplied with 4 holes. 8 holes, according to EN 1092-1, on request.

INSTALLATION:
Horizontal installation.
See IMI – Installation and maintenance instructions.
In steam applications, a “Y" strainer, humidity separator, and steam trap should be installed upstream of the valve.

CE MARKING – GROUP 2 (PED – EUROPEAN DIRECTIVE)		
PN 16	**PN 40**	**CATEGORY**
DN 15 to 50	DN 15 to 32	SEP
DN 65 to 100	DN 40 to 100	1 (CE Marked)

We reserve the right to change the design and material of this product without notice.

LIMITING CONDITIONS						
MODEL	**PRV57 and PRV57i**		**PRS57 and PRS57i**		**PRV57E, PRS57E, PRV57iE and PRS57iE**	
Body design conditions	PN 16	PN 40	PN 16	PN 40	PN 16	PN 40
Maximum upstream pressure	13 bar	28 bar	13 bar	17 bar	10 bar	10 bar
Maximum downstream pressure	13 bar	17 bar	13 bar	17 bar	10 bar	10 bar
Minimum downstream pressure *	0,35 bar	0,35 bar	0,35 bar	0,35 bar	0,35 bar	0,35 bar
Maximum operating temperature **	250 ºC	250 ºC	250 ºC	250 ºC	180 ºC	180 ºC
Maximum reducing ratio	See capacity tables					
Rangeability	10:1	10:1	10:1	10:1	10:1	10:1
Maximum hydraulic factory valve body test	24 bar	60 bar	24 bar	60 bar	24 bar	60 bar

* 0,07 bar with low pressure diaphragm (limited to 7 bar maximum inlet pressure).
** See "Ordering Codes" table for restrictions.

REGULATING RANGES				
SPRING COLOUR	**GREEN W/ 1 DIAPHRAGM**	**BLUE W/ 1 DIAPHRAGM**	**RED W/ 2 DIAPHRAGMS**	**BLACK W/ 2 DIAPHRAGMS**
Regulating range	0,07 to 0,5 bar * 0,35 to 2 bar	1,5 to 5,5 bar	3,5 to 8,5 bar	7 to 17 bar

* With low pressure diaphragm.

OPTIONS				
LOW PRESSURE DIAPHRAGM	**DOME-LOADING**	**TOP CAP**	**BOTTOM COVER DRAIN CONNECTION**	**INTERNAL SENSING LINE**
				

We reserve the right to change the design and material of this product without notice.

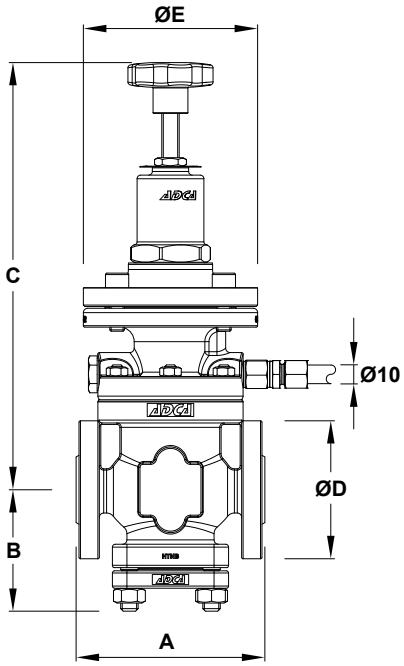

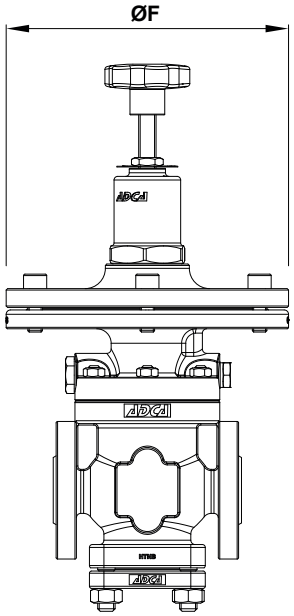

Optional low pressure diaphragm

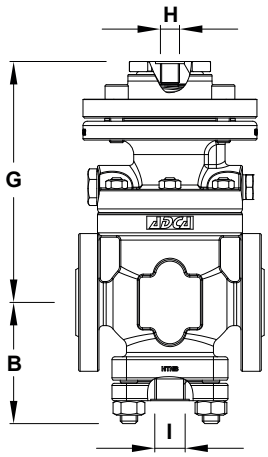

Optional dome-loading and drain connection

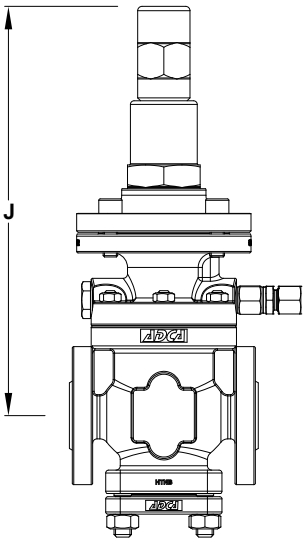

Optional top cap

DIMENSIONS (mm)											
SIZE	**A**	**B**	**C**	**ØD**	**ØE**	**ØF**	**G**	**H**	**I ***	**J**	**WGT. (kg) ****
DN 15	130	88	294	95	120	195	166	1/4"	1/2"	282	10,5
DN 20	150	88	294	105	120	195	166	1/4"	1/2"	282	16
DN 25	160	88	294	115	120	195	166	1/4"	1/2"	282	17
DN 32	180	102	306	140	120	195	178	1/4"	1/2"	294	20
DN 40	200	108	314	150	120	195	186	1/4"	1/2"	302	24
DN 50	230	118	351	165	120	195	223	1/4"	1/2"	339	31
DN 65 ***	290	147	377	185	120	195	249	1/4"	1/2"	365	48
DN 80	310	152	392	200	120	195	264	1/4"	1/2"	380	53
DN 100	350	168	422	235	120	195	294	1/4"	1/2"	410	72

* Optional drain connection for steam trapping. This drain connection does not replace the humidity separator, but can be useful if, e.g., the valve stops operating for large periods of time.
** Approximated values, consult manufacturer for certified weights.
*** Standard PN 16 DN 65 flanges are supplied with 4 holes. 8 holes, according to EN 1092-1/-2, on request.
Remark: Connections H and I are threaded ISO 228. Others on request.

We reserve the right to change the design and material of this product without notice.

MATERIALS

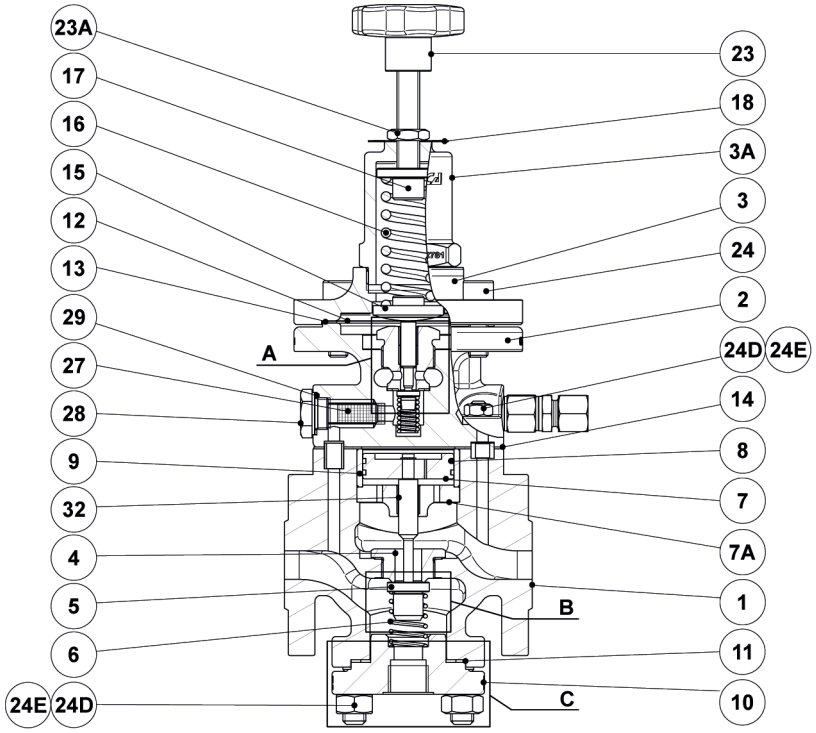

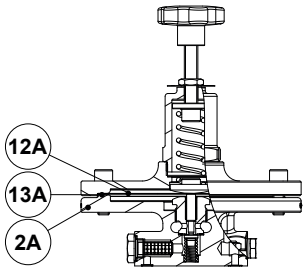

Optional low pressure diaphragm

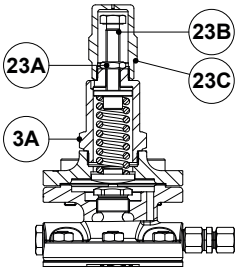

Optional top cap

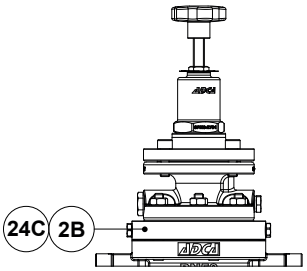

Adapting flange (DN 50 and above)

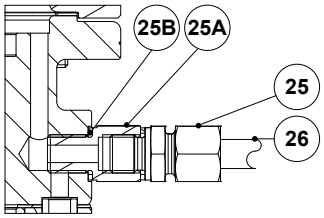

External sensing line connection

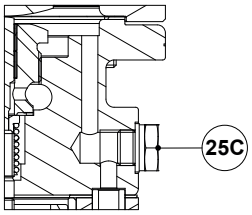

Optional internal sensing line

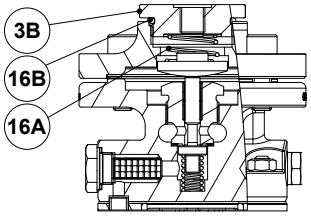

Optional dome-loading

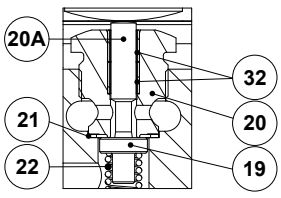

Detail A
Pilot valve

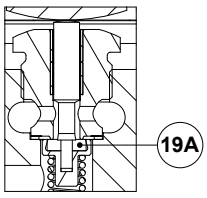

Detail A
Pilot valve (soft)

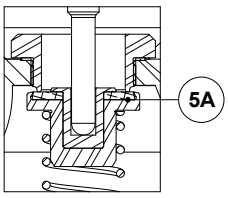

Detail B
Main valve (soft)

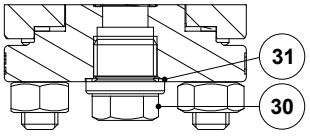

Detail C
Optional drain connection

We reserve the right to change the design and material of this product without notice.

MATERIALS			
POS. No.	**DESIGNATION**	**PRV57**	**PRV57i**
1	Valve body	A216 WCB / 1.0619	A351 CF8M / 1.4408
2	Pilot valve body	A216 WCB; A351 CF8 / 1.4308	A351 CF8 / 1.4308
2A	Low pressure pilot valve body	A216 WCB; A351 CF8 / 1.4308	A351 CF8 / 1.4308
2B	Adapting flange	C45E / 1.1191	AISI 316 / 1.4401
3	Top cover	A216 WCB; A351 CF8 / 1.4308	A351 CF8 / 1.4308
3A	Spring cover	A216 WCB; A351 CF8 / 1.4308	A351 CF8 / 1.4308
3B	Dome-loading cover	C45E / 1.1191	AISI 316 / 1.4401
4	* Main valve seat	AISI 316 / 1.4401	AISI 316 / 1.4401
5	* Main valve plug	Hardened stainless steel	Hardened stainless steel
5A	* Main valve plug (soft)	AISI 316 w/ PTFE/GR; Rulon	AISI 316 w/ PTFE/GR; Rulon
6	* Main valve spring	AISI 302 / 1.4300	AISI 302 / 1.4300
7	* Piston	Brass / Bronze	Brass / Bronze
7A	Piston guide	AISI 316 / 1.4401	AISI 316 / 1.4401
8	* Piston ring	Bronze / FKM / EPDM / NBR	Bronze / FKM / EPDM / NBR
9	Piston liner	AISI 304 / 1.4301	AISI 304 / 1.4301
10	Bottom cover	A216 WCB / 1.0619	A351 CF8M / 1.4408
11	* Bottom cover gasket	Stainless steel / Graphite	Stainless steel / Graphite
12	* Diaphragm	AISI 301 / 1.4310	AISI 301 / 1.4310
12A	* Low pressure diaphragm	AISI 301 / 1.4310	AISI 301 / 1.4310
13	* Diaphragm gasket	Compressed synthetic fibers	Compressed synthetic fibers
13A	* Low pressure diaphragm gasket	Compressed synthetic fibers	Compressed synthetic fibers
14	* Pilot valve gasket	Stainless steel / Graphite	Stainless steel / Graphite
15	Lower spring carrier	Brass	Brass
16	* Adjustment spring	Steel	Steel
16A	Diaphragm spring	Stainless steel	Stainless steel
16B	O-ring	FPM	FPM
17	Top spring carrier	Brass	Brass
18	Spring identification plate	Aluminium	Aluminium
19	* Pilot valve plug	AISI 316 / 1.4401	AISI 316 / 1.4401
19A	* Pilot valve plug (soft)	PTFE/GR; Rulon, etc.	PTFE/GR; Rulon, etc.
20	* Pilot valve seat	AISI 316 / 1.4401	AISI 316 / 1.4401
20A	Pushrod	AISI 316 / 1.4401	AISI 316 / 1.4401
21	* Pilot valve gasket	Copper	Copper
22	* Pilot valve spring	AISI 302 / 1.4300	AISI 302 / 1.4300
23	Adjustment knob	Plastic / Stainless steel	Plastic / Stainless steel
23A	Lock nut	AISI 304 / 1.4301	AISI 304 / 1.4301
23B	Bolt	Stainless steel A2-70	Stainless steel A2-70
23C	Cover	AISI 303 / 1.4305	AISI 303 / 1.4305
24	Bolt	ISO 898 or EN 10269 steel	ISO 3506 stainless steel
24C	Bolt	ISO 898 or EN 10269 steel	ISO 3506 stainless steel
24D	Stud	ISO 898 or EN 10269 steel	ISO 3506 stainless steel
24E	Nut	ISO 898 or EN 10269 steel	ISO 3506 stainless steel
25	Compression fitting	Plated carbon steel	Stainless steel
25A	Adapter	AISI 304 / 1.4301	AISI 304 / 1.4301
25B	Gasket	Copper	Copper
25C	Plug	AISI 304 / 1.4301	AISI 304 / 1.4301
26	Sensing pipe	Copper	Stainless steel
27	* Pilot valve strainer	AISI 304 / 1.4301	AISI 304 / 1.4301
28	Strainer nut	AISI 304 / 1.4301	AISI 304 / 1.4301
29	Gasket	Copper	Copper
30	Plug	AISI 316 / 1.4401	AISI 316 / 1.4401
31	Gasket	Copper	Copper
32	Plain bearing	Bronze / steel	Bronze / steel

* Available spare parts.

We reserve the right to change the design and material of this product without notice.

STANDARD VALVE FOR STEAM, COMPRESSED AIR AND OTHER GASES

The high pressure upstream gas enters the main valve and the pilot valve. Compression of the regulating spring over the diaphragm causes the pilot valve to open, admitting regulated pressure to the piston chamber. The force exerted by the regulated pressure on top of the piston pushes it down which, in turn, opens the main valve. The downstream pressure is then transmitted through the sensing line, acting below the diaphragm.
Any downstream pressure increase deflects the diaphragm, and the pilot valve closes, thus shutting off regulated gas to the piston which, in turn, closes the main valve. When the desired downstream pressure is achieved, the valve opens again, repeating the process.

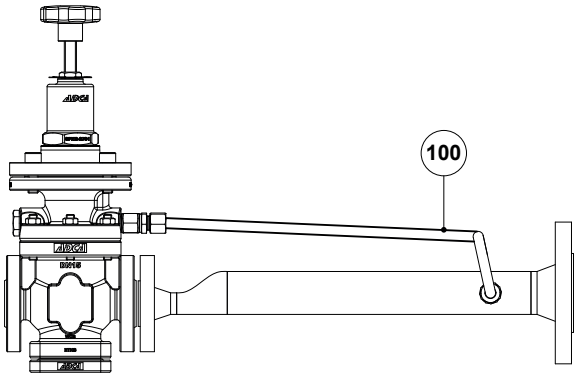

Standard valve

The external sensing line (100) must always be connected unless the valve is supplied with an internal sensing line. It should be fitted in the downstream pipe at a distance of, at least, 1 meter or 15 pipe diameters, whichever is greater, from the valve and other fittings. A spool piece can be supplied to house the sensing.

Warning: Internal sensing line is not recommended when:
- The reduced pressure is below 50% of the inlet pressure (mandatory for pressure reductions greater than 10:1);
- Instability of reduced pressure occurs;
- When a low pressure diaphragm assembly is fitted;
- In systems with difficult outlet pipe work conditions.

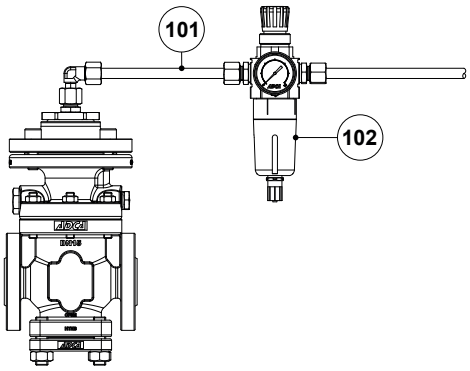

Dome-loading valve

DOME-LOADING

The loading force is exerted on the pilot valve diaphragm by an external gas signal rather than by the regulating spring. This feature allows remote adjusting of the downstream set point pressure using a relieving gas pressure regulator or an I/P converter. Allows faster response to pressure changes and maintains outlet pressure more accurately under flowing conditions, when compared to the standard spring loaded version, minimizing droop.
The loading control pressure is approximately the same as the required outlet pressure (± 0,2 bar).

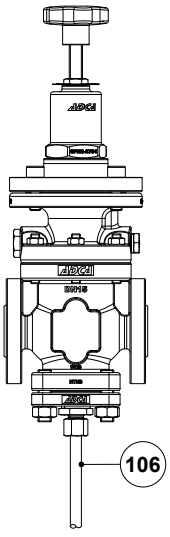

Valve with drain connection

DRAIN CONNECTION

The optional drain connection is specially recommended for steam applications where it is not possible to install a humidity separator close to the valve, when the valve is under no-flow static condition during large periods of time or for system cleaning during start up.

We reserve the right to change the design and material of this product without notice.

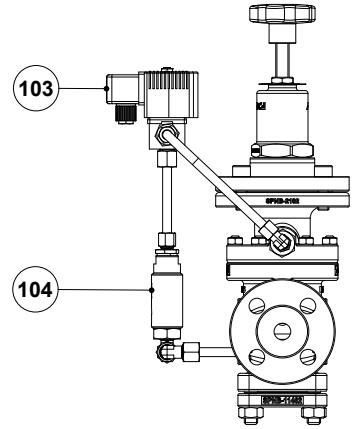

Valve with solenoid valve for remote closure

VALVE WITH SOLENOID VALVE FOR REMOTE CLOSURE (PRV57E)

The PRV57E operates like the standard valve, but it allows remote closure by means of a switch or timer. When the solenoid valve (103) closes, the pressure signal to the pilot valve is interrupted, causing the main valve to close.

TECHNICAL DATA (SOLENOID VALVE)	
Body material	Brass or stainless steel
Maximum operating pressure	10 bar
Maximum operating temperature	180 ºC
Level of protection	IP 65
Rated voltage	230 V AC ±10%, 24 V DC ±10% *
Power consumption	12 VA ±10% (AC) , 12 W ±10% (DC)

* Others on request.

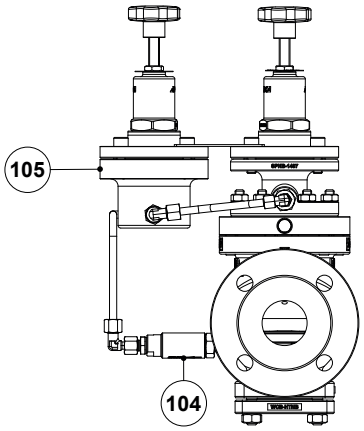

Pressure reducing and sustaining valve

PRESSURE REDUCING AND SUSTAINING VALVE (PRS57)

The PRS57 is a derivative of the PRV57 and consists of a combination between a pressure reducing valve and a pressure sustaining valve. While the pilot fitted on the main valve body controls downstream pressure, a secondary pilot valve (105), in this case a pressure sustaining valve, fitted on the side of the PRV controls the upstream pressure. The pressure sustaining valve is closed until the established set pressure is reached, and so is the main valve, since there is no flow feeding its pilot. As soon as the set pressure is reached, the pressure sustaining valve opens, allowing flow to the PRV's pilot valve which, in turn, opens the main valve.

EQUIPMENT		
POS. No.	**DESIGNATION**	**MATERIAL**
100	Sensing pipe	Copper or stainless steel
101	Compressed air supply	Copper or stainless steel
102	P10 air filter regulator	Polycarbonate
103	Solenoid valve	Brass or stainless steel
104	ADCA IS100 filter	AISI 316 / 1.4401
105	ADCA PS7 pressure sustaining valve	Carbon steel or stainless steel
106	Drain connection	Copper or stainless steel

We reserve the right to change the design and material of this product without notice.

LRQA CERTIFIED ISO 9001

ADCA

CAPACITY TABLE

INLET (bar)	OUTLET (bar)	SATURATED STEAM (kg/h)									COMPRESSED AIR (Nm³/h – 0 ºC – 1,013 bar)								
		DN 15	DN 20	DN 25	DN 32	DN 40	DN 50	DN 65	DN 80	DN 100	DN 15	DN 20	DN 25	DN 32	DN 40	DN 50	DN 65	DN 80	DN 100
0,7	0,35	40	75	125	190	280	480	–	–	–	15	31	50	70	111	191	–	–	–
1	0,4	45	95	160	240	355	620	–	–	–	16	33	51	79	113	194	–	–	–
	0,6	40	83	140	210	308	535	–	–	–	27	55	90	138	199	343	–	–	–
2	0,4 – 1	75	150	250	380	545	960	1490	1880	3390	60	122	201	307	444	763	1765	2199	3943
	1,2	65	138	230	345	515	900	1335	1685	3022	54	109	180	276	399	686	1712	2133	3825
	1,6	50	105	175	265	393	685	–	–	–	45	91	150	230	333	572	–	–	–
3	0,4 – 1,5	100	200	335	510	750	1310	1980	2475	4358	120	240	300	460	666	1150	2384	2972	5325
	2	85	170	290	450	660	1155	1732	2175	3962	105	210	251	384	555	1050	2217	2764	4952
	2,2	80	165	277	416	613	1050	1585	1981	3616	48	93	152	232	334	570	1979	2467	4420
	2,6	60	127	203	315	467	818	–	–	–	45	61	101	154	223	384	–	–	–
4	0,4 – 2	125	250	420	630	920	1580	2530	3170	5696	150	238	499	739	1089	1825	2996	3738	6700
	2,5	114	225	385	580	850	1465	2328	2923	5249	135	208	449	568	978	1635	2786	3476	6231
	3,2	92	183	309	482	708	1205	1735	2179	3913	119	177	398	492	867	1444	2217	2766	4958
	3,6	68	137	237	353	536	932	–	–	–	60	124	202	154	444	763	–	–	–
5	0,4 – 2	150	310	512	755	1114	1895	3022	3765	6733	180	360	505	768	1110	1908	3615	4508	8081
	3	144	295	488	743	1095	1835	2869	3615	6486	165	330	556	691	997	1716	3506	4372	7839
	4	115	225	373	578	846	1430	2130	2675	4852	151	298	404	613	885	1526	2675	3336	5980
	4,2	105	213	343	525	770	1342	–	–	–	136	285	383	582	840	1449	–	–	–
6	0,4 – 3	175	355	602	919	1358	2298	3566	4453	8021	210	468	696	1046	1523	2580	4217	5260	9426
	4	159	314	538	827	1217	2142	3219	4012	7229	195	437	646	969	1412	2389	3922	4892	8766
	5	119	250	411	637	941	1644	2276	2870	5150	150	345	494	738	1079	1817	2614	3261	5844
	5,2	109	217	360	568	839	1465	–	–	–	135	315	443	664	968	1627	–	–	–
7	0,4 – 3,5	197	410	670	1005	1540	2644	3959	4952	8911	240	480	804	1200	1740	2989	4812	5999	10752
	5	178	358	587	908	1345	2306	3513	4405	7921	210	421	701	1046	1524	2640	3994	4979	8925
	6	132	271	452	688	1027	1773	2764	3022	5416	150	301	499	756	1104	1829	2983	3719	6667
	6,2	122	251	416	635	934	1618	–	–	–	105	211	349	529	773	1280	–	–	–
8	0,4 – 4	225	471	778	1169	1759	3043	4605	5745	10398	270	546	798	1353	1746	3411	5404	6741	12079
	5	221	339	730	1118	1659	2884	4305	5395	9704	265	516	747	1276	1635	3220	5133	6404	11475
	6	192	385	639	976	1451	2513	3761	4704	8467	225	449	710	1125	1635	2762	4485	5595	10026
	7	146	293	481	732	1085	1887	2727	3168	5695	180	361	600	892	1296	2184	2972	3707	6644
	7,2	137	274	453	692	1011	1782	–	–	–	156	312	540	768	1128	1978	–	–	–
9	0,4 – 5	251	518	856	1325	1923	3358	5051	6334	11387	301	612	1011	1507	2244	3789	5999	7480	13406
	6	241	500	788	1222	1766	3095	4653	5794	10396	270	553	910	1359	1980	3474	5579	6956	12468
	7	206	398	679	1068	1559	2676	4060	5051	8961	240	492	816	1230	1798	2970	4799	5984	10725
	8	156	314	514	794	1142	2053	2671	3319	5991	180	360	598	903	1288	2247	2999	3740	6703
	8,2	145	292	483	741	1090	1888	–	–	–	165	329	547	826	1176	2056	–	–	–
10	0,4 – 5	275	561	944	1468	2127	3718	5592	7031	12377	330	659	1116	1692	2412	4173	6594	8222	14737
	6	272	551	917	1419	2074	3619	5443	6830	12270	314	628	1065	1615	2301	3983	6396	7975	14295
	7	252	508	838	1268	1871	3249	4951	6187	10891	288	599	1004	1503	2202	3810	5803	7235	12968
	8	213	431	722	1118	1659	2831	4108	5149	9209	240	492	806	1212	1770	3022	4879	6084	10905
	9	163	333	548	843	1244	2152	2721	3466	6190	192	360	658	898	1350	2280	3165	3946	7074
	9,2	150	298	493	756	1143	1929	–	–	–	181	342	628	852	1283	2165	–	–	–
12	1 – 6	330	680	1124	1732	2541	4407	6631	8216	14850	390	792	1300	1978	2844	4917	8078	10072	18054
	8	311	629	1023	1575	2332	4034	6090	7573	13862	360	732	1219	1827	2622	4497	7432	9266	16610
	10	265	533	812	1271	1867	3202	4503	5592	9903	270	553	910	1359	1980	3474	4847	6043	10833
	11	175	364	568	924	1350	2359	2920	3612	6536	210	468	696	1046	1523	2580	2585	3223	5777
15	1 – 8	408	839	1373	2138	3118	5403	8164	10393	18317	480	972	1602	2427	3564	6072	9562	11922	21372
	12	339	656	1068	1629	2441	4250	6385	7986	14356	375	762	1272	1923	2784	4692	7076	8822	15815
	14	199	401	662	1017	1503	2619	2968	3661	6438	255	528	889	1332	1896	3398	3251	4054	7266
17	1 – 9	425	863	1460	2178	3165	5343	9204	11360	20290	540	912	1819	2737	3984	6618	11047	13776	24692
	15	347	709	1190	1816	2694	4712	5870	7363	14855	315	708	1179	1764	2520	4418	7401	9230	16544
	16	207	416	717	1217	1608	2824	3598	4312	6330	255	528	889	1332	1896	3398	3314	4133	7408
20	1 – 12 (2 – 12)*	541	1062	1774	2746	4001	6971	10390	13363	23765	615	1254	2379	3153	4578	7911	12531	15626	28010
	15	459	931	1552	2335	3476	6184	9156	11382	20298	534	900	1799	2707	3940	6738	10401	12970	23248
	17	391	648	988	1748	2840	4698	6098	7628	9476	450	901	1497	2246	3336	5796	7769	9688	17366
25	2,5 – 12 (6 – 12)*	685	1337	2191	3360	4971	8392	12870	15845	29200	780	1590	2689	3982	5790	9902	15499	19326	34645
	15	680	1320	2183	3356	4877	8284	12690	15710	29010	756	1530	2548	3828	5616	9600	15034	18747	33605
	17	641	1256	2084	3156	4670	7866	12370	14860	27720	720	1464	2412	3707	5130	9123	13949	17394	31180
28	5 – 15 (6 – 15)*	781	1521	3355	3864	5611	9862	14870	18380	33164	870	1770	2910	4430	6390	10950	16984	21180	37962
	17	763	1471	3259	3768	5506	9652	14340	17770	32665	840	1724	2820	4320	6180	10680	16474	20545	36823

* For the sizes DN 65 to DN 100.

We reserve the right to change the design and material of this product without notice.

ORDERING CODES PRV57

VALVE MODEL	V57	X	XX	S	1	X	X	1	L	15	
PRV57 – Steam (standard)	V57										
PRV57G – Compressed air and gases	V57G										
CONSTRUCTION MATERIAL											
Carbon steel construction		X									
Stainless steel construction		I									
OPTIONS											
Standard valve with external sensing line connection			XX								
Valve with internal sensing line			OX								
Solenoid valve for remote closure and external sensing line connection **(a)**			EX								
Solenoid valve for remote closure with internal sensing line **(a)**			EO								
Pressure sustaining / reducing for external sensing line connection **(b)**			SX								
Pressure sustaining / reducing with internal sensing line **(b)**			SO								
Pressure sustaining / reducing / solenoid for external sensing line connection **(a)**			YX								
Pressure sustaining / reducing / solenoid with internal sensing line **(a)**			YO								
DIAPHRAGM											
Standard diaphragm				S							
Low pressure diaphragm				L							
REGULATING RANGE											
Green spring – 0,35 to 2 bar (0,07 to 0,5 bar with low pressure diaphragm) – single diaphragm					1						
Blue spring – 1,5 to 5,5 bar – single diaphragm					2						
Red spring – 3,5 to 8,5 bar – double diaphragm					3						
Black spring – 7 to 17 bar – double diaphragm					4						
0,35 to 4 bar – single diaphragm (dome-loading) **(c)**					6						
2 to 17 bar – double diaphragm (dome-loading) **(c)**					7						
PISTON RINGS											
Bronze						X					
FPM – Tmax 200 ºC **(d)**						V					
EPDM – Tmax 130 ºC **(d)**						E					
NBR – Tmax 80 ºC **(d)**						N					
DRAIN CONNECTION AND TOP CAP											
None							X				
Drain connection ISO 228 1/2"							D				
Drain connection 1/2" NPT							E				
Top cap (adjustment screw with cover)							G				
Top cap and drain connection ISO 228 1/2"							H				
Top cap and drain connection 1/2" NPT							I				
VALVE SEALING											
Standard metal to metal with hardened plug								1			
Stellited plug and seat								2			
Soft sealed with virgin PTFE – Tmax 180 ºC								3			
Soft sealed with PTFE/GR – Tmax 200 ºC								4			
Soft sealed with Rulon® – Tmax 220 ºC								5			
Soft sealed with FPM – Tmax 200 ºC								6			
PIPE CONNECTIONS											
Flanged EN 1092-1 PN 16									L		
Flanged EN 1092-1 PN 40									N		
Flanged ASME B16.5 Class 150									U		
SIZE											
DN 15										15	
DN 20										20	
DN 25										25	
...											
SPECIAL CONSTRUCTION / ADDITIONAL OPTIONS											
A full description must to be provided and validated in case of a non-standard construction											E

(a) Solenoid valve voltage must be specified.
(b) ADCA PS7 pressure sustaining valve. See respective datasheet for regulating range and further information.
(c) The loading control pressure is approximately the same as the required downstream pressure (± 0,2 bar).

We reserve the right to change the design and material of this product without notice.