PRESSURE REDUCING VALVES
RPW45B
(ASME)

DESCRIPTION

The ADCA RPW45B series pressure reducing valves are single seated, diaphragm sensing proportional controllers that operate without auxiliary energy.
Designed for use with water, compressed air and other liquids and gases compatible with the construction.



MAIN FEATURES

Pressure balancing through robust piston design.
Soft sealing to meet tight shut-off requirements.
Robust construction (fit-and-forget).
Interchangeable actuators and adjustment springs.

OPTIONS:	Low-noise flow divider. Sensing line connection on body.
USE:	Water, compressed air and other liquids or gases compatible with the construction.
AVAILABLE MODELS:	RPW45BS – carbon steel. RPW45Bi – stainless steel.
SIZES:	2" to 4".
CONNECTIONS:	Flanged ASME B16.5 Class 150 or 300.
AVAILABLE ACTUATORS:	A1, A10, A12, A3 and A4 – carbon steel. A2 and A21 – SG iron or carbon steel. A1i, A10i, A12i, A2i, A21i, A3i and A4i – stainless steel.
INSTALLATION:	See IMI – Installation and maintenance instructions.

CE MARKING – GROUP 2 (PED – EUROPEAN DIRECTIVE)		
CLASS 150	**CLASS 300**	**CATEGORY**
2"	–	SEP
21/2" to 4"	2" to 4"	1 (CE marked)

We reserve the right to change the design and material of this product without notice.

LIMITING CONDITIONS – VALVE		
MODEL	**RPW45BS and RPW45Bi**	**RPW45BS and RPW45Bi**
Body design conditions	Class 150	Class 300
Maximum upstream pressure	16 bar	40 bar
Maximum downstream pressure	13 bar	18 bar
Minimum downstream pressure	0,2 bar	0,2 bar
Maximum operating temperature	130 ºC	130 ºC
Maximum reducing ratio	10:1	10:1
Rangeability	10:1	10:1
Maximum hydraulic factory valve body test	24 bar	60 bar

LIMITING CONDITIONS – ACTUATOR							
ACTUATOR MODEL	**A1 A1i**	**A10 A10i**	**A12 A1i**	**A21 A21i**	**A2 A2i**	**A3 A3i**	**A4 A4i**
Maximum operating pressure (bar)	25	25	25	18	12	2,5	1,5
Maximum operating temperature	90 ºC *						

* See “Sensing Line Connection Options” table.

FLOW RATE COEFFICIENTS (m³/h)				
SIZE	**2"**	**21/2"**	**3"**	**4"**
Kvs	26,5	51,5	79,5	129,5

ACTUATOR AND SPRING SELECTION TABLE									
SIZE		**A4 A4i**		**A3 A3i**	**A2 A2i**	**A21 A21i**	**A1 A1i**	**A10 A10i**	**A12 A12i**
2"	Regulating range (bar)	0,2 to 0,5	0,4 to 1	0,7 to 1,6	1,4 to 3,5	2,5 to 5,5	3,5 to 8	5 to 10	8 to 18
	Spring No.	67	61	61	61	61	61	61	61
21/2"	Regulating range (bar)	0,2 to 0,5	0,4 to 1	0,7 to 1,6	1,4 to 3,5	2,5 to 5,5	3,5 to 8	5 to 10	8 to 18
	Spring No.	67	61	61	61	61	61	61	61
3"	Regulating range (bar)	0,2 to 0,5	0,4 to 1,2	0,7 to 2	1,8 to 4,5	2,5 to 5,5	3,5 to 9	5 to 12	10 to 18
	Spring No.	68	62	62	62	62	62	62	62
4"	Regulating range (bar)	0,2 to 0,6	0,4 to 1,2	0,7 to 2	1,8 to 4,5	2,5 to 5,5	3,5 to 9	5 to 12	10 to 18
	Spring No.	69	63	63	63	63	63	63	63

We reserve the right to change the design and material of this product without notice.

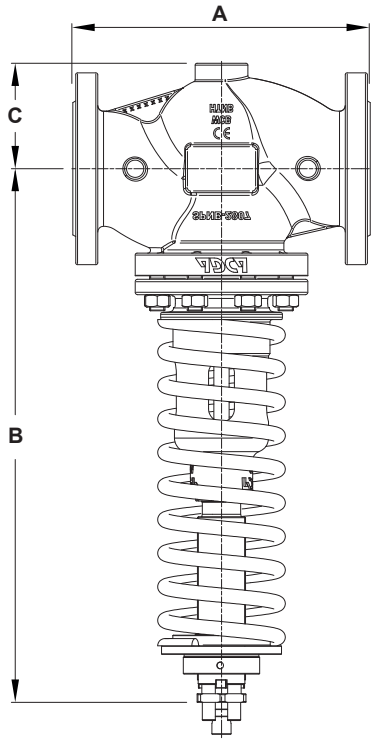

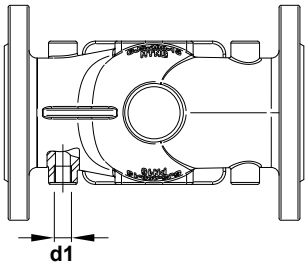

Optional sensing line connection on body

DIMENSIONS – VALVE (mm)					
DIMENSION		**SIZE**			
		2"	**21/2"**	**3"**	**4"**
A	**CLASS 150**	254	276	298	352
	CLASS 300	267	292	318	368
B	**CLASS 150**	470	495	556	597
	CLASS 300	470	495	556	597
C	**CLASS 150**	85	100	110	130
	CLASS 300	85	100	110	130
d1		1/4"	1/4"	1/4"	1/4"
WGT. (kg)	**CLASS 150**	22,7	35	44,9	59,9
	CLASS 300	25	38,1	50,2	67,8

At the beginning of 2022, new face-to-face dimensions were defined for certain Class 150 valves. Valves may still be supplied with the previous face-to-face dimensions upon request. Please consult the manufacturer.

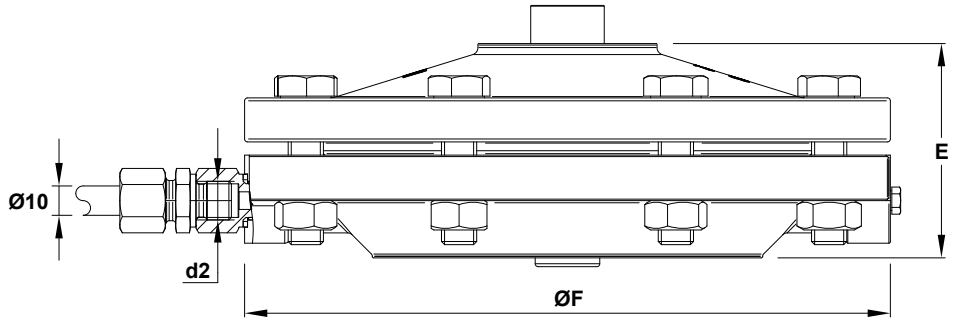

DIMENSIONS – ACTUATOR (mm)							
DIMENSION	**ACTUATOR**						
	A1 A1i	**A10 A10i**	**A12 A12i**	**A2 A2i**	**A21 A21i**	**A3 A3i**	**A4 A4i**
d2	1/4"	1/4"	1/4"	1/4"	1/4"	1/4"	1/4"
E	67	67	67	74	74	71	81
ØF	172	172	172	220	220	282	340
WEIGHT (kg)	4,3	4,3	4,3	7,3	7,3	11,3	16,3

We reserve the right to change the design and material of this product without notice.

SENSING LINE CONNECTION OPTIONS

EXTERNAL SENSING LINE	SENSING LINE CONNECTION ON BODY
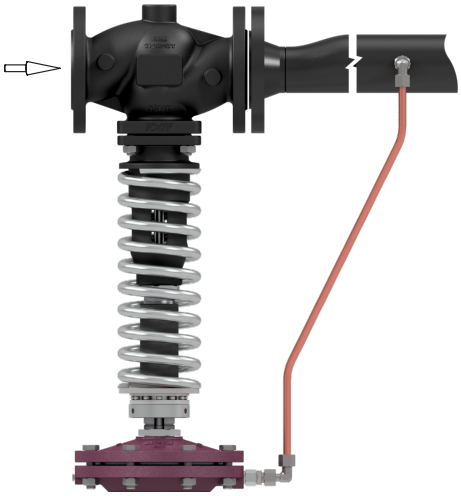	
For use with liquids below 130 ºC. For use with gases below 90 °C. For gases between 90 ºC and 130 °C, please consult the manufacturer. Installation with the actuator oriented upwards is also acceptable. The sensing line should be connected at least 1 meter downstream of the valve outlet.	For use with liquids below 130 ºC. For use with gases below 90 °C. For gases between 90 ºC and 130 °C, please consult the manufacturer. Installation with the actuator oriented upwards is also acceptable. The valve can be supplied with the sensing tube factory-installed. If not supplied installed, the connection at the body is delivered closed with a plug. The image shows the connection and sensing tube positioned on the left side relative to the flow direction. If installation constraints require, the connection may also be made on the right side. For valves up to DN 25, the sensing connection is located at the cast boss on the bottom of the valve body.

MATERIALS

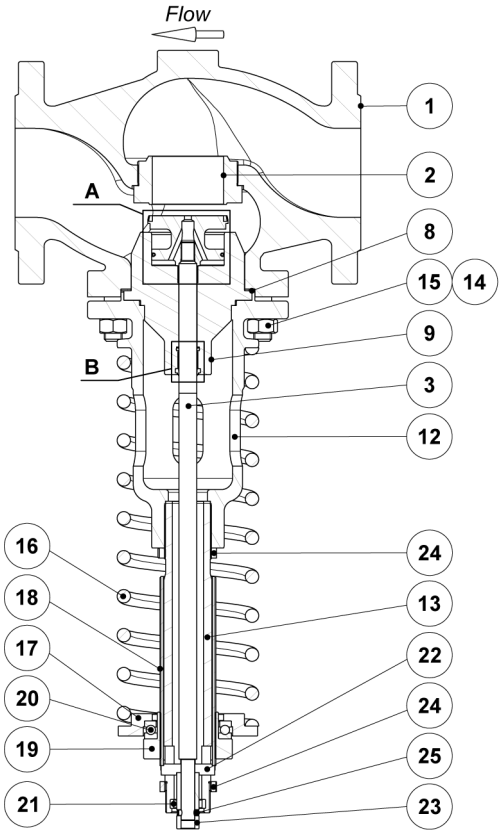

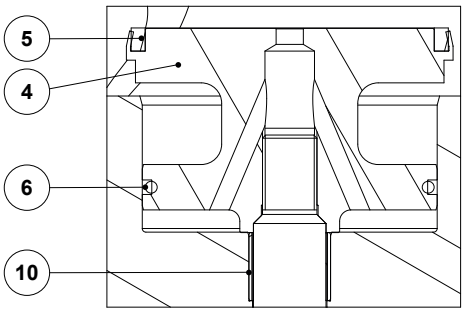

Detail A

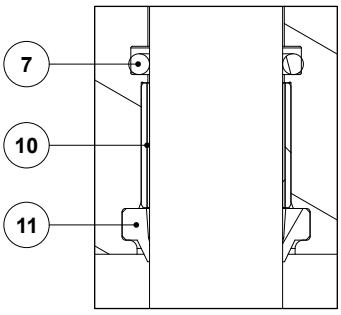

Detail B

We reserve the right to change the design and material of this product without notice.

MATERIALS – VALVE		
POS. No.	**DESIGNATION**	**MATERIAL**
1	Valve body (RPW45BS)	A216 WCB / 1.0619
	Valve body (RPW45Bi)	A351 CF8M / 1.4408
2	* Seat	AISI 316 / 4.4401
3	* Stem	AISI 304 / 1.4301
4	* Valve plug	AISI 316 / 4.4401
5	* Seal ring	** EPDM
6	* O-ring	** EPDM
7	* O-ring	** EPDM
8	* Gasket	Stainless steel / Graphite
9	Stem guide	AISI 304 / 1.4301
10	Plain bearing	Bronze / PTFE
11	* Scraper	FPM; NBR
12	Piston body (RPW45BS)	A216 WCB / 1.0619
	Piston body (RPW45Bi)	A351 CF8M / 1.4408
13	Piston body extension (RPW45BS)	P355T1 / 1.0421
	Piston body extension (RPW45Bi)	AISI 304 / 1.4301
14	Stud (RPW45BS)	Steel 8.8; EN 10269 steel
	Stud (RPW45Bi)	Stainless steel A2-70
15	Nut (RPW45BS)	Steel 8.8; EN 10269 steel
	Nut (RPW45Bi)	Stainless steel A2-70
16	* Adjustment spring	Spring steel
17	Lower spring plate (RPW45BS)	C45E / 1.1191
	Lower spring plate (RPW45Bi)	AISI 304 / 1.4301
18	Threaded tube	CuZn39Pb3
19	Spring adjusting nut	AISI 304 / 1.4301
20	Ball bearing	Zinc plated steel
21	Spacer (RPW45BS)	S355J2G3 / 1.0570
	Spacer (RPW45Bi)	AISI 304 / 1.4301
22	Pressure star (RPW45BS)	S235JR / 1.0038
	Pressure star (RPW45Bi)	AISI 304 / 1.4301
23	Pressure tube (RPW45BS)	C45E / 1.1191
	Pressure tube (RPW45Bi)	AISI 304 / 1.4301
24	Lock nut	AISI 303 / 1.4305
25	Pin	AISI 303 / 1.4305

* Available spare parts. ** Others on request.

We reserve the right to change the design and material of this product without notice.

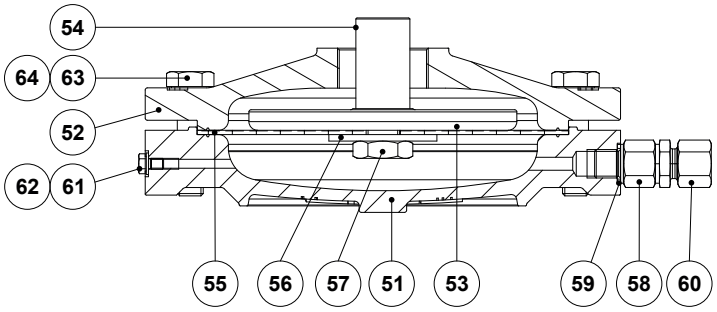

A series actuators

MATERIALS – ACTUATOR				
POS. No.	**DESIGNATION**	**A1, A10, A12, A3 and A4**	**A2 and A21**	**A1i, A10i, A12i, A2i, A21i, A3i and A4i**
51	Lower diaphragm chamber	A216 WCB / 1.0619	GJS-400-15 / 0.7040; A216 WCB / 1.0619	A351 CF8M / 1.4408
52	Upper diaphragm chamber	A216 WCB / 1.0619	GJS-400-15 / 0.7040; A216 WCB / 1.0619	A351 CF8M / 1.4408
53	Pressure plate	A216 WCB / 1.0619	GJS-400-15 / 0.7040	A351 CF8M / 1.4408; AISI 304 / 1.4301
54	Diaphragm plate spindle	A216 WCB / 1.0619	GJS-400-15 / 0.7040	A351 CF8M / 1.4408; AISI 304 / 1.4301
55	* Diaphragm	Neoprene reinforced polyamide	Neoprene reinforced polyamide	Neoprene reinforced polyamide
56	Washer	Copper	Copper	AISI 304 / 1.4301
57	Hex nut	CuZn39Pb3	CuZn39Pb3	AISI 304 / 1.4301
58	Flow restrictor	AISI 303 / 1.4305	AISI 303 / 1.4305	AISI 303 / 1.4305
59	Gasket	Copper	Copper	Copper
60	Compression fitting	AISI 316Ti / 1.4571	AISI 316Ti / 1.4571	AISI 316Ti / 1.4571
61	Vent screw	Zinc plated steel	Zinc plated steel	AISI 304 / 1.4301
62	Washer	Copper	Copper	AISI 304 / 1.4301
63	Bolt	Zinc plated steel	Zinc plated steel	AISI 304 / 1.4301
64	Nut	Zinc plated steel	Zinc plated steel	AISI 304 / 1.4301

* Available spare parts.

We reserve the right to change the design and material of this product without notice.

ORDERING CODES RPW45B											
VALVE MODEL	**RPW45B**	**1**	**S**	**61**	**E**	**0**	**XX**	**X**	**U**	**50**	
RPW45B – Pressure reducing valve	**RPW45B**										
VALVE SERIES											
Series 1		**1**									
BODY MATERIAL											
A216 WCB / 1.0619 carbon steel			**S**								
A351 CF8M / 1.4408 stainless steel			**I**								
SPRING No.											
61 (2" and 21/2")				**61**							
62 (3")				**62**							
63 (4")				**63**							
67 (2" and 21/2")				**67**							
68 (3")				**68**							
69 (4")				**69**							
VALVE SEALING											
Soft sealed with EPDM					**E**						
SENSING LINE CONNECTION ON BODY (a)											
Without sensing line connection on body						**0**					
Threaded connection on the right side, relative to flow direction						**Y**					
Threaded connection on the left side, relative to flow direction (non-standard construction)						**W**					
Threaded connection on both sides (non-standard construction)						**Z**					
OPTIONS											
Standard valve							**XX**				
Valve with carbon steel piston body (only for RPW45Bi)							**XS**				
SPECIAL FEATURES											
None								**X**			
PIPE CONNECTIONS											
Flanged ASME B16.5 Class 150									**U**		
Flanged ASME B16.5 Class 300									**V**		
SIZE											
2"										**50**	
21/2"										**65**	
3"										**80**	
4"										**100**	
SPECIAL CONSTRUCTION / ADDITIONAL OPTIONS											
Full description or additional codes have to be added in case of non-standard combination											**E**

(a) Connections are closed with plugs in case the valve is not supplied with the tube pre-assembled from factory.

HOW TO ORDER

Indicate the complete valve ordering code together with the required actuator size. If the valve is to be supplied with factory-installed sensing tube, it must be stated in the order.
Example: RPW45B1S61EWXXXU50 fitted with A2 actuator and sensing line connection on body.

We reserve the right to change the design and material of this product without notice.