AIR AND GAS FLOAT TRAPS
FA45.1
(Stainless steel ; 1" – DN 25)

DESCRIPTION

The ADCA FA45.1 is a series of fully automatic ball float traps specially designed for condensate drainage in compressed air and gas systems.
Typical applications include aftercoolers, separators and compressed air mains.

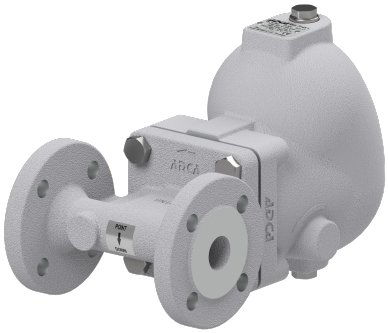

MAIN FEATURES

Modulating discharge.
Unaffected by sudden or wide load and pressure variations.
Flow direction can be easily changed by repositioning the body in relation to the mechanism and cover.



OPTIONS: Metal to metal sealing.
Equalizing (vent) and drain connections.
BDV – Blowdown valve.
AFZ – Anti-freeze device.
FLL – Float lifting lever.

USE: Compressed air and other non corrosive gases compatible with the construction.

AVAILABLE MODELS: FA45.1-4,5, FA45.1-10, FA45.1-14, FA45.1-21 and FA45.1-32 – stainless steel.

SIZES: 1"; DN 25.



CONNECTIONS: Female threaded ISO 7 Rp or NPT.
Flanged EN 1092-1 PN 40.
Flanged ASME B16.5 Class 150 or 300.
Socket weld (SW) ASME B16.11.

INSTALLATION: Inline horizontal or vertical installation.
Angled horizontal or vertical installation.
See IMI – Installation and maintenance instructions.

ΔPMX: FA45.1-4,5 – 4,5 bar
FA45.1-10 – 10 bar
FA45.1-14 – 14 bar
FA45.1-21 – 21 bar
FA45.1-32 – 32 bar

CE MARKING – GROUP 2 (PED – EUROPEAN DIRECTIVE)		
CLASS 150	**PN 40**	**CATEGORY**
1" – DN 25	–	SEP
–	1" – DN 25	1 (CE marked)

BODY LIMITING CONDITIONS			
FLANGED PN 40 *	**FLANGED CLASS 300 ****	**FLANGED CLASS 150 ****	**RELATED TEMPERATURE**
ALLOWABLE PRESSURE	**ALLOWABLE PRESSURE**	**ALLOWABLE PRESSURE**	
37,9 bar	34,4 bar	13,3 bar	100 ºC
31,8 bar	28,8 bar	11,1 bar	200 ºC
29,9 bar	26,6 bar	10,2 bar	250 ºC
27,6 bar	25,2 bar	9,7 bar	300 ºC

PMO – Maximum operating pressure: 32 bar; TMO – Maximum operating temperature: FPM valve sealing: 200 ºC.
Metal to metal sealing: 250 ºC; Minimum liquid specific weight: 0,75 kg/dm³.
* According to EN 1092-1:2018; ** According to EN 1759-1:2004.
Body limiting conditions PN 40 or below, depending on the type of connection adopted. Rating PN 40 for threaded and SW versions.

We reserve the right to change the design and material of this product without notice.

FLOW RATE CAPACITY (kg/h)													
MODEL	SIZE	DIFFERENTIAL PRESSURE (bar)											
		0,5	1	1,5	2	4,5	7	10	12	14	16	21	25	32
FA45.1-4,5	1" – DN 25	941	1330	1630	1882	2823	–	–	–	–	–	–	–	–
FA45.1-10	1" – DN 25	597	845	1035	1195	1793	2237	2674	–	–	–	–	–	–
FA45.1-14	1" – DN 25	455	644	788	910	1366	1704	2036	2231	2409	–	–	–	–
FA45.1-21	1" – DN 25	242	342	419	484	726	906	1082	1186	1281	1369	1569	–	–
FA45.1-32	1" – DN 25	177	251	308	355	533	665	795	871	941	1006	1152	1257	1423

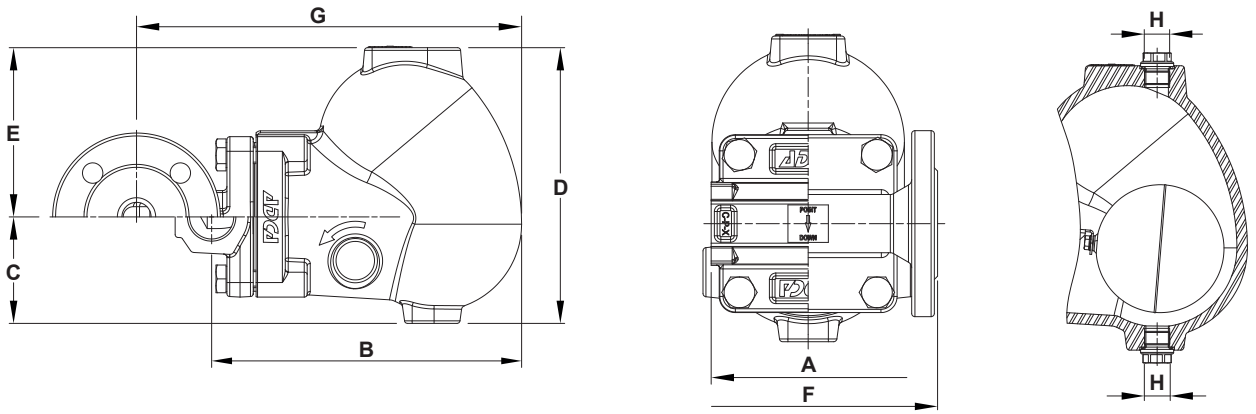

Inline design

DIMENSIONS – INLINE DESIGN (mm)																
SIZE	THREADED / SW							PN 40			CLASS 150			CLASS 300		
	A	B	C	D	E	H *	WGT. (kg)	F	G	WGT. (kg)	F	G	WGT. (kg)	F	G	WGT. (kg)
1" – DN 25	120	212	73	189	116	3/8"	8,9	160	264	12	160	264	11,9	160	264	12,6

* As standard, in versions with EN flanges or female ISO 7 Rp threads, these connections are female threaded ISO 228. In versions with ASME flanges, female NPT threads or SW, these connections are female threaded NPT.

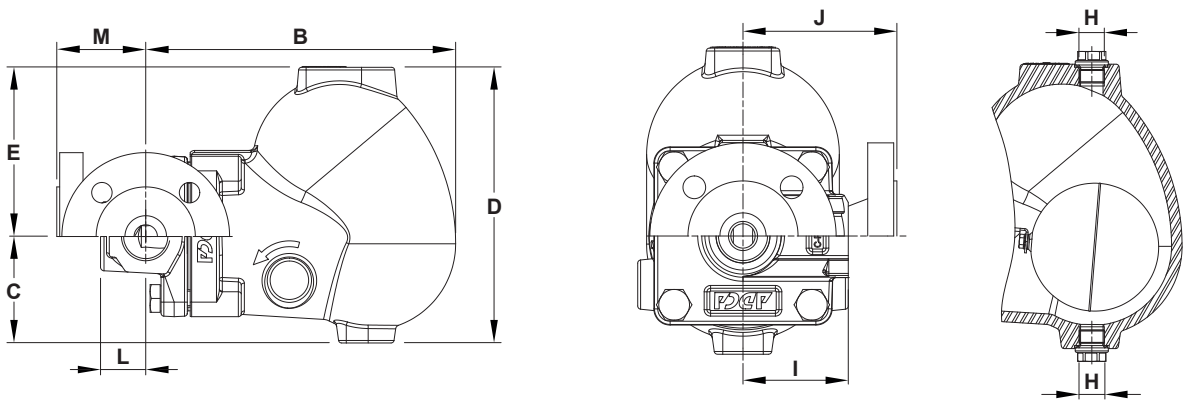

Angled design

DIMENSIONS – ANGLED DESIGN (mm)																	
SIZE	THREADED / SW								PN 40			CLASS 150			CLASS 300		
	B	C	D	E	H *	I	L	WGT. (kg)	J	M	WGT. (kg)	J	M	WGT. (kg)	J	M	WGT. (kg)
1" – DN 25	212	73	189	116	3/8"	65	31	8,4	95	61	11	100	66	10,5	110	76	11,7

* As standard, in versions with EN flanges or female ISO 7 Rp threads, these connections are female threaded ISO 228. In versions with ASME flanges, female NPT threads or SW, these connections are female threaded NPT.

We reserve the right to change the design and material of this product without notice.

MATERIALS

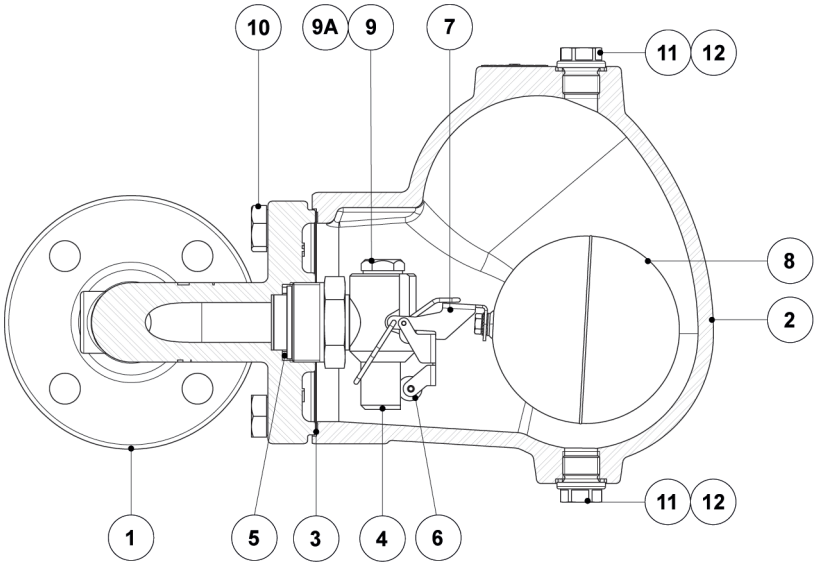

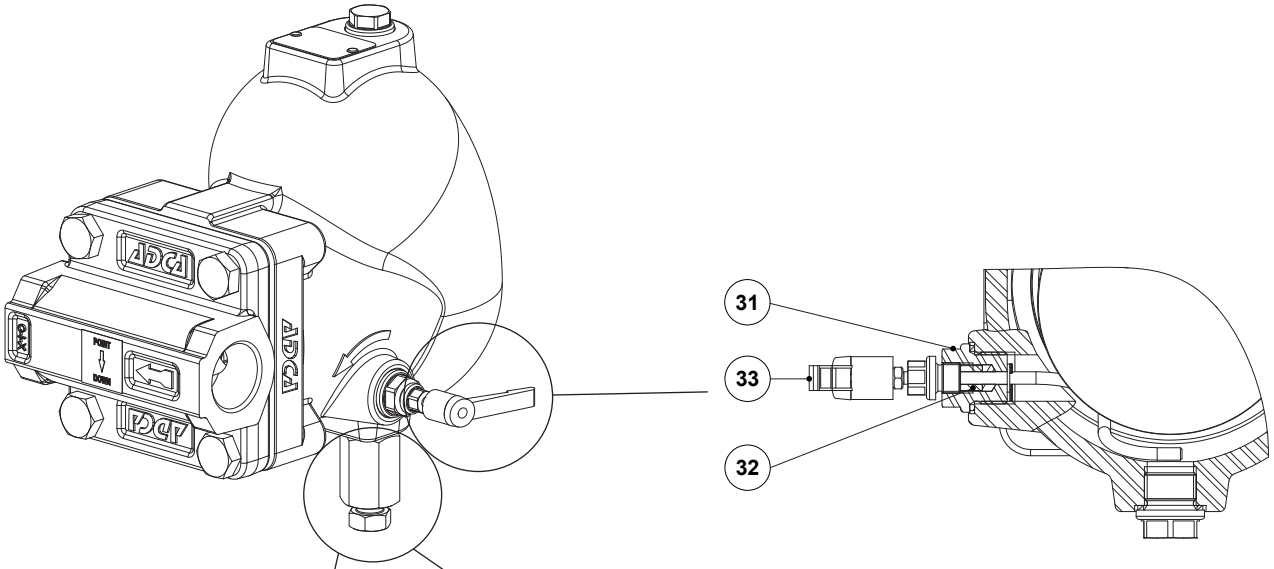

Optional float lifting lever (FLL)

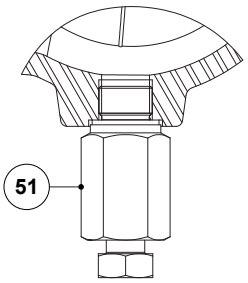

Optional blowdown valve (BDV); Manual

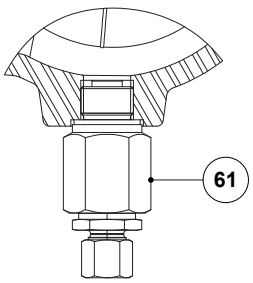

Optional anti-freeze device (AFZ); Automatic

We reserve the right to change the design and material of this product without notice.

MATERIALS		
POS. No.	**DESIGNATION**	**MATERIAL**
1	Body (inline flanged)	A351 CF8M / 1.4408
	Body (inline threaded)	AISI 316L / 1.4404
	Body (angled)	AISI 316L / 1.4404
2	Cover	A351 CF8M / 1.4408
3	* Gasket	Stainless steel / Graphite
4	* Seat	AISI 303 / 1.4305
5	* Gasket	Copper
6	* Valve ball	AISI 316 / 1.4401; FPM
7	* Lever	AISI 304 / 1.4301
8	* Float	AISI 304 / 1.4301
9	Plug	AISI 316L / 1.4404
9A	Gasket	Copper
10	Bolt	Stainless steel A2-70
11	Plug	AISI 316L / 1.4404
12	** Gasket	Copper; AISI 304 / 1.4301
31	Lever mechanism	AISI 303 / 1.4305; AISI 304 / 1.4301; AISI 316L / 1.4404
32	Packing	Graphite
33	Lever	Plastic
51	Blowdown valve	AISI 303 / 1.4305; AISI 316L / 1.4404
61	Anti-freeze device	AISI 303 / 1.4305; AISI 316L / 1.4404

* Available spare parts; ** Not applicable in NPT version.

FLOW DIRECTION

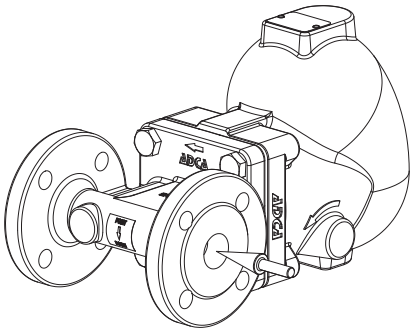

IR – Horizontal from right to left

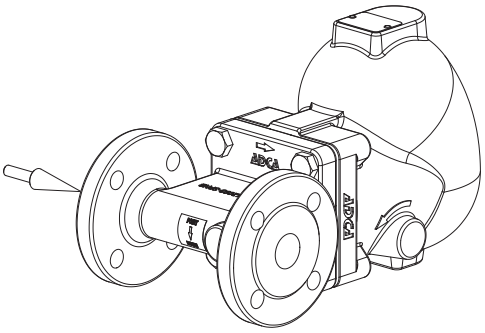

IL – Horizontal from left to right

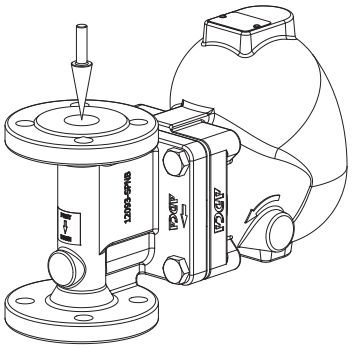

IT – Vertical from top to bottom

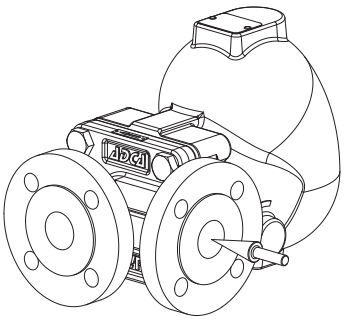

AR – Angled from right to front

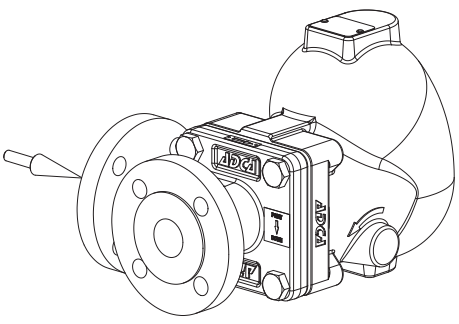

AL – Angled from left to front

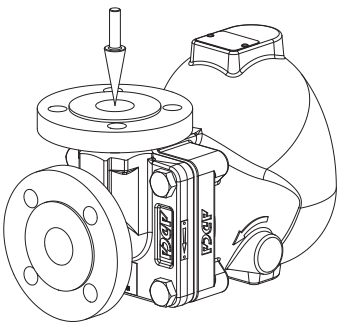

AT – Angled from top to front

We reserve the right to change the design and material of this product without notice.

ORDERING CODES FA45.1									
MODEL	**FA451**	**2**	**V**	**XX**	**X**	**IR**	**A**	**25**	
FA45.1 – Stainless steel	**FA451**								
MAXIMUM ALLOWABLE DIFFERENTIAL PRESSURE (ΔPMX)									
4,5 bar		**2**							
10 bar		**3**							
14 bar		**4**							
21 bar		**5**							
32 bar		**7**							
VALVE SEALING									
FPM (standard)			**V**						
Metal to metal			**M**						
COVER CONNECTIONS									
None				**XX**					
3/8" threaded connections on top and bottom, closed with plugs (mandatory if any options are considered)				**10**					
OPTIONS									
If any, these have specific separate ordering codes, please refer to the appropriate documentation									
FLL – FLOAT LIFTING LEVER									
None					**X**				
Lifting lever on the right side (when facing the steam trap body)					**R**				
Lifting lever on the left side (when facing the steam trap body)					**L**				
FLOW DIRECTION									
Inline horizontal from right to left (standard)						**IR**			
Inline horizontal from left to right						**IL**			
Inline vertical from top to bottom						**IT**			
Angled from right to front						**AR**			
Angled from left to front						**AL**			
Angled from top to front						**AT**			
PIPE CONNECTIONS									
Female threaded ISO 7 Rp							**A**		
Female threaded NPT							**C**		
Socket weld (SW) ASME B16.11							**H**		
Flanged EN 1092-1 PN 40							**N**		
Flanged ASME B16.5 Class 150							**U**		
Flanged ASME B16.5 Class 300							**V**		
SIZE									
1" or DN 25								**25**	
SPECIAL CONSTRUCTION / ADDITIONAL OPTIONS									
A full description must to be provided and validated in case of a non-standard construction									**E**

We reserve the right to change the design and material of this product without notice.