# FLOAT AND THERMOSTATIC STEAM TRAPS
# FLT21
# (SG iron ; 1/2" to 1" – DN 15 to DN 25)

DESCRIPTION

The ADCA FLT21 is a series of float and thermostatic steam traps with integral air vent designed for modulating discharge of condensate, ensuring maximum system heat transfer.
Typical applications include unit heaters, heat exchangers, dryers, jacketed vessels and other applications where continuous discharge is essential.



MAIN FEATURES

Modulating discharge of condensate at steam temperature.
Unaffected by sudden or wide load and pressure variations.
No backing-up with condensate.
Excellent air discharge through its integrated air vent.
Flow direction can be easily changed by repositioning the body in relation to the mechanism and cover.



OPTIONS: Equalizing (vent) and drain connections.
SLR – Steam lock release.
HVV – Hand vent valve.
BDV – Blowdown valve.
AFZ – Anti-freeze device.
FLL – Float lifting lever.
VB21M – Vacuum breaker.



USE: Saturated and superheated steam.

AVAILABLE MODELS: FLT21-4,5, FLT21-10 and FLT21-14 – SG iron.

SIZES: 1/2" to 1"; DN 15 to DN 25.

CONNECTIONS: Female threaded ISO 7 Rp or NPT.
Flanged EN 1092-1/-2 PN 16.
Flanged ASME B16.42 Class 150.

INSTALLATION: Inline horizontal or vertical installation.
Angled horizontal or vertical installation.
See IMI – Installation and maintenance instructions.

ΔPMX: FLT21-4,5 – 4,5 bar
FLT21-10 – 10 bar
FLT21-14 – 14 bar

| CE MARKING – GROUP 2 (PED – EUROPEAN DIRECTIVE) | |
|---|---|
| **PN 16** | **CATEGORY** |
| 1/2" to 1" – DN 15 to 25 | SEP |

| BODY LIMITING CONDITIONS | | |
|---|---|---|
| **FLANGED PN 16 *** | **FLANGED CLASS 150 **** | **RELATED TEMPERATURE** |
| **ALLOW. PRESS.** | **ALLOW. PRESS.** | |
| 16 bar | 16 bar | 100 ºC |
| 15,5 bar | 14,8 bar | 150 ºC |
| 14,7 bar | 13,9 bar | 200 ºC |
| 13,9 bar | 12,1 bar | 250 ºC |

PMO – Maximum operating pressure: 14 bar.
TMO – Maximum operating temperature: 250 ºC.
* Acc. to EN 1092-2:2018; ** Acc. to ASME B16.42.
Body limiting conditions PN 16 or below, depending on the type of connection adopted. Rating PN 16 for threaded versions.


We reserve the right to change the design and material of this product without notice.

| FLOW RATE CAPACITY (kg/h) | | | | | | | | | | |
|---|---|---|---|---|---|---|---|---|---|---|
| MODEL | SIZE | DIFFERENTIAL PRESSURE (bar) | | | | | | | | |
| | | 0,5 | 1 | 1,5 | 2 | 4,5 | 7 | 10 | 12 | 14 |
| FLT21-4,5 | 1/2" to 1" – DN 15 to 25 | 305 | 395 | 455 | 500 | 680 | – | – | – | – |
| FLT21-10 | 1/2" to 1" – DN 15 to 25 | 235 | 330 | 400 | 440 | 630 | 694 | 705 | – | – |
| FLT21-14 | 1/2" to 1" – DN 15 to 25 | 220 | 277 | 318 | 365 | 481 | 556 | 654 | 691 | 710 |

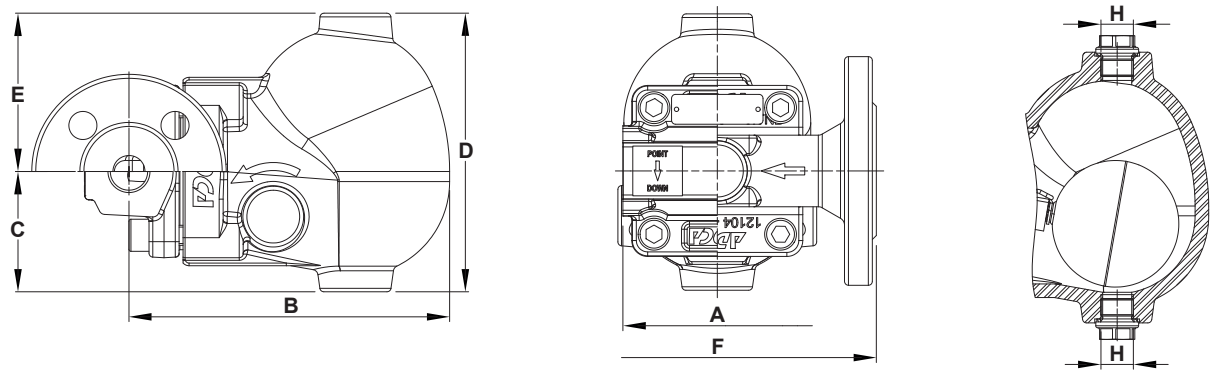


*Inline design*

| DIMENSIONS – INLINE DESIGN (mm) | | | | | | | | | | | |
|---|---|---|---|---|---|---|---|---|---|---|---|
| SIZE | THREADED | | | | | | | PN 16 | | CLASS 150 | |
| | A | B | C | D | E | H * | WEIGHT (kg) | F | WEIGHT (kg) | F | WEIGHT (kg) |
| 1/2" – DN 15 | 95 | 160 | 60 | 139 | 79 | 3/8" | 4,9 | 150 | 6,2 | 150 | 5,8 |
| 3/4" – DN 20 | 95 | 160 | 60 | 139 | 79 | 3/8" | 4,8 | 150 | 6,7 | 150 | 6,1 |
| 1" – DN 25 | 95 | 160 | 60 | 139 | 79 | 3/8" | 4,7 | 160 | 7,4 | 160 | 7,2 |

* As standard, in versions with EN flanges or female ISO 7 Rp threads, these connections are female threaded ISO 228. In versions with ASME flanges or female NPT threads, these connections are female threaded NPT.

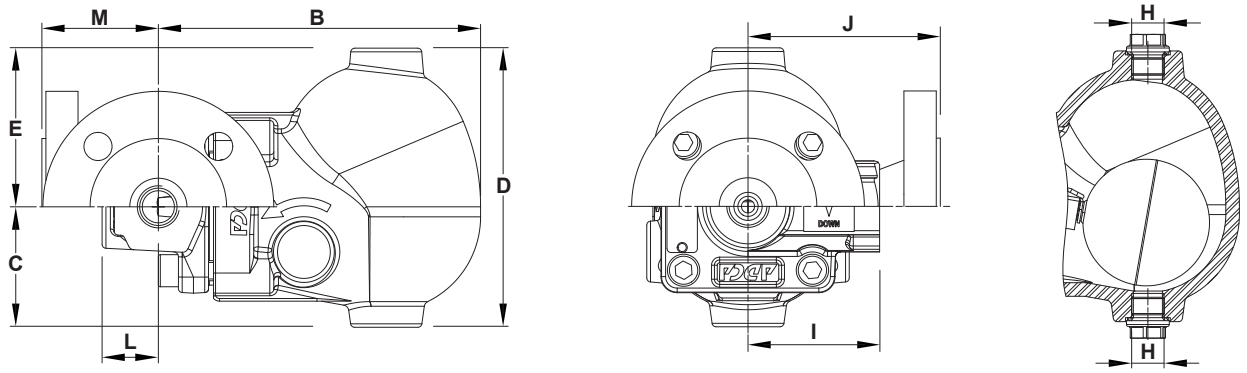


*Angled design*

| DIMENSIONS – ANGLED DESIGN (mm) | | | | | | | | | | | | | | |
|---|---|---|---|---|---|---|---|---|---|---|---|---|---|---|
| SIZE | THREADED | | | | | | | | PN 16 | | | CLASS 150 | | |
| | B | C | D | E | H * | I | L | WGT. (kg) | J | M | WGT. (kg) | J | M | WGT. (kg) |
| 1/2" – DN 15 | 160 | 60 | 139 | 79 | 3/8" | 65 | 28 | 4,9 | 95 | 58 | 6,5 | 100 | 63 | 6 |
| 3/4" – DN 20 | 160 | 60 | 139 | 79 | 3/8" | 65 | 28 | 4,9 | 95 | 58 | 7 | 100 | 63 | 6,4 |
| 1" – DN 25 | 160 | 60 | 139 | 79 | 3/8" | 65 | 28 | 4,9 | 95 | 58 | 7,5 | 100 | 63 | 6,9 |

* As standard, in versions with EN flanges or female ISO 7 Rp threads, these connections are female threaded ISO 228. In versions with ASME flanges or female NPT threads, these connections are female threaded NPT.

## MATERIALS

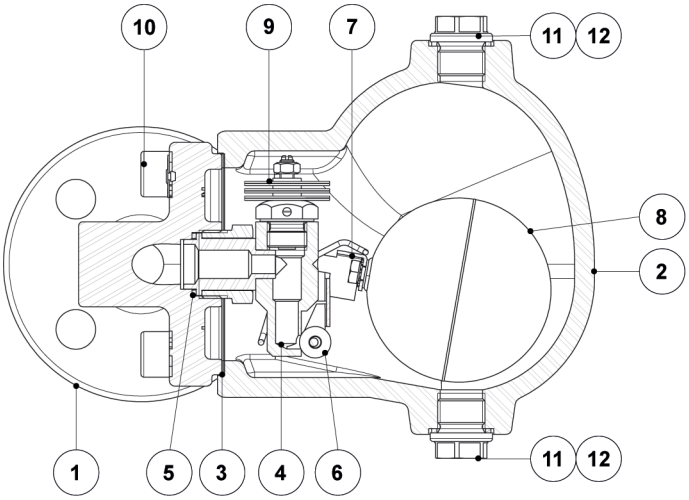


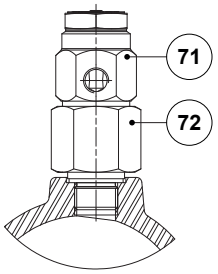


*Optional vacuum breaker (VB21M)*

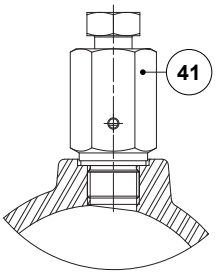


*Optional hand vent valve (HVV)*

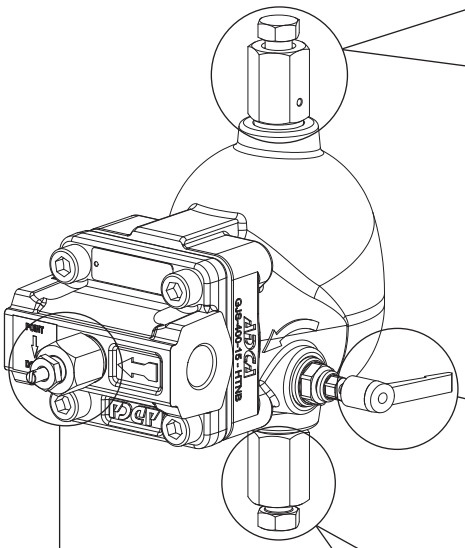

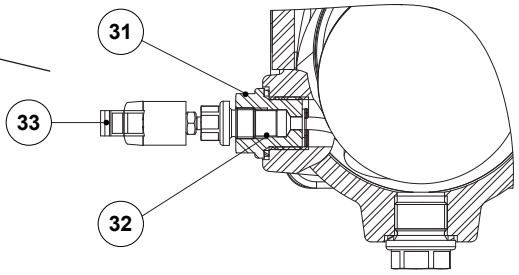


*Optional float lifting lever (FLL)*

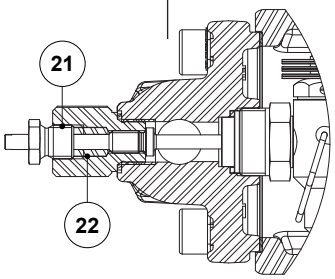


*Optional steam lock release (SLR)*

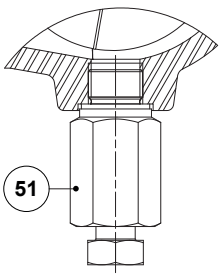


*Optional blowdown valve (BDV); Manual*

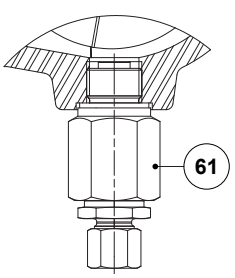


*Optional anti-freeze device (AFZ); Automatic*



We reserve the right to change the design and material of this product without notice.

| MATERIALS | | |
|---|---|---|
| **POS. No.** | **DESIGNATION** | **MATERIAL** |
| **1** | Body (inline flanged) | GJS-400-15 / 0.7040 |
| | Body (inline threaded) | P250GH / 1.0460 |
| | Body (angled) | P250GH / 1.0460 |
| **2** | Cover | GJS-400-15 / 0.7040 |
| **3** | * Gasket | Stainless steel / Graphite |
| **4** | * Seat | AISI 303 / 1.4305 |
| **5** | * Gasket | Copper |
| **6** | * Valve ball | AISI 316 / 1.4401 |
| **7** | * Lever | AISI 304 / 1.4301 |
| **8** | * Float | AISI 304 / 1.4301 |
| **9** | * Automatic air vent | Stainless steel; Bimetallic |
| **10** | Bolt | Zinc plated steel |
| **11** | Plug | AISI 316L / 1.4404 |
| **12** | ** Gasket | Copper; AISI 304 / 1.4301 |
| **21** | Steam lock release | AISI 420 / 1.4021; AISI 316L / 1.4404 |
| **22** | Packing | Graphite |
| **31** | Lever mechanism | AISI 303 / 1.4305; AISI 304 / 1.4301; AISI 316L / 1.4404 |
| **32** | Packing | Graphite |
| **33** | Lever | Plastic |
| **41** | Hand vent valve | AISI 303 / 1.4305; AISI 316L / 1.4404 |
| **51** | Blowdown valve | AISI 303 / 1.4305; AISI 316L / 1.4404 |
| **61** | Anti-freeze device | AISI 303 / 1.4305; AISI 316L / 1.4404 |
| **71** | Vacuum breaker | AISI 303 / 1.4305 |
| **72** | Connector | AISI 316L / 1.4404 |

* Available spare parts; ** Not applicable in NPT version.

## FLOW DIRECTION

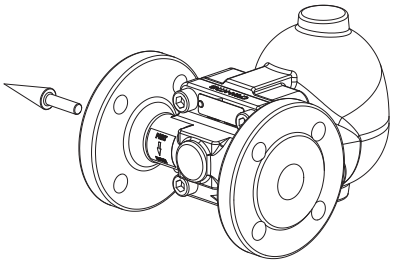

*IR – Horizontal from right to left*

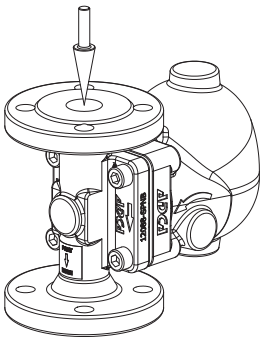

*IT – Vertical from top to bottom*

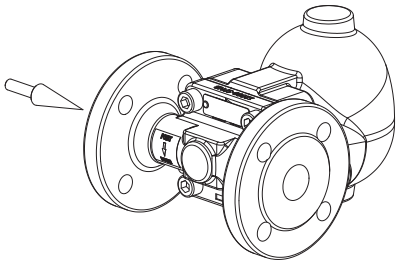

*IL – Horizontal from left to right*

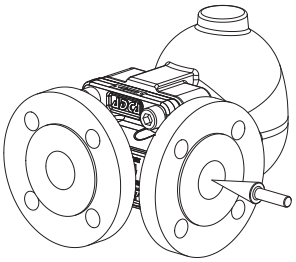

*AR – Angled from right to front*

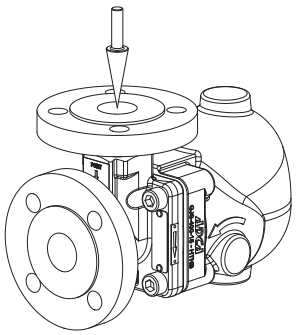

*AT – Angled from top to front*

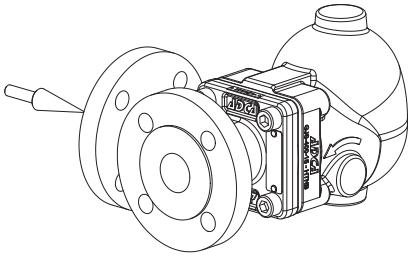

*AL – Angled from left to front*



We reserve the right to change the design and material of this product without notice.

## ORDERING CODES FLT21

| MODEL | A21 | 2 | V | XX | X | X | IR | A | 15 | |
|---|---|---|---|---|---|---|---|---|---|---|
| FLT21 – SG iron | **A21** | | | | | | | | | |
| **MAXIMUM ALLOWABLE DIFFERENTIAL PRESSURE (ΔPMX)** | | | | | | | | | | |
| 4,5 bar | | **2** | | | | | | | | |
| 10 bar | | **3** | | | | | | | | |
| 14 bar | | **4** | | | | | | | | |
| **AUTOMATIC AIR VENT** | | | | | | | | | | |
| Bimetallic air vent (standard) | | | **V** | | | | | | | |
| None | | | **X** | | | | | | | |
| **COVER CONNECTIONS** | | | | | | | | | | |
| None | | | | **XX** | | | | | | |
| 3/8" threaded connections on top and bottom, closed with plugs (mandatory if any options are considered) | | | | **10** | | | | | | |
| **OPTIONS** | | | | | | | | | | |
| If any, these have specific separate ordering codes, please refer to the appropriate documentation | | | | | | | | | | |
| **SLR – STEAM LOCK RELEASE** | | | | | | | | | | |
| None | | | | | **X** | | | | | |
| With steam lock release assembled | | | | | **S** | | | | | |
| **FLL – FLOAT LIFTING LEVER** | | | | | | | | | | |
| None | | | | | | **X** | | | | |
| Lifting lever on the right side (when facing the steam trap body) | | | | | | **R** | | | | |
| Lifting lever on the left side (when facing the steam trap body) | | | | | | **L** | | | | |
| **FLOW DIRECTION** | | | | | | | | | | |
| Inline horizontal from right to left (standard) | | | | | | | **IR** | | | |
| Inline horizontal from left to right | | | | | | | **IL** | | | |
| Inline vertical from top to bottom | | | | | | | **IT** | | | |
| Angled from right to front | | | | | | | **AR** | | | |
| Angled from left to front | | | | | | | **AL** | | | |
| Angled from top to front | | | | | | | **AT** | | | |
| **PIPE CONNECTIONS** | | | | | | | | | | |
| Female threaded ISO 7 Rp | | | | | | | | **A** | | |
| Female threaded NPT | | | | | | | | **C** | | |
| Flanged EN 1092-2 PN 16 | | | | | | | | **L** | | |
| Flanged ASME B16.42 Class 150 | | | | | | | | **U** | | |
| **SIZE** | | | | | | | | | | |
| 1/2" or DN 15 | | | | | | | | | **15** | |
| 3/4" or DN 20 | | | | | | | | | **20** | |
| 1" or DN 25 | | | | | | | | | **25** | |
| **SPECIAL CONSTRUCTION / ADDITIONAL OPTIONS** | | | | | | | | | | |
| A full description must to be provided and validated in case of a non-standard construction | | | | | | | | | | **E** |



We reserve the right to change the design and material of this product without notice.