# HYGIENIC BALL VALVES
# M3H
# (21/2" to 4" – DN 65 to DN 100)

## DESCRIPTION

The ADCAPure M3H three piece body ball valves are isolating valves designed for use with clean steam, condensate and other gases and liquids used in high purity and aseptic processes.
The valve is not designed as a control valve and should only be used as an isolating valve, fully open or fully closed.
The product is mainly designed for the pharmaceutical, biotech, semiconductor, cosmetics, fine chemical and food & beverage industries.



## MAIN FEATURES

True or full bore floating ball design.
Can be serviced without removal from the pipeline.
Tube weld with loose body flanges (360º rotation after installation).
Bidirectional.
Antistatic device.
Anti blow out proof stem.
ISO 5211 mounting.

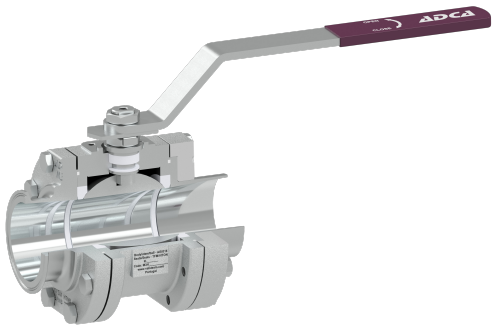

## STANDARD SURFACE FINISH

Internal wetted parts: ≤ 0,51 µm Ra – SF1.
External: as casted.
Other surface conditions see TIS.GIA – General information ADCAPure.
Ultrasonic cleaning.

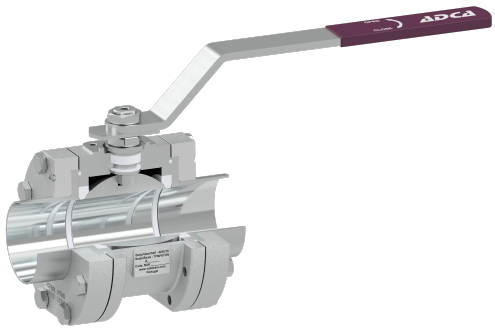

| | |
|---|---|
| OPTIONS: | Different sealing materials.<br>Degreased for oxygen use.<br>Cavity fillers.<br>Lever with locking system.<br>For more options and extras, consult IS M3H.100 – Sanitary Ball Valves Additional Options and Extras. |
| USE: | Clean steam, gases and liquids compatible with the construction. |
| AVAILABLE MODELS: | M3H – investment casting. |
| SIZES: | 21/2" to 4"; DN 65 to DN 100. |
| CONNECTIONS: | ASME BPE, DIN or ISO clamp ferrules, tube weld (ETO) ends or a combination of both.<br>Others on request. |
| PACKAGING: | Assembling and packaging in a clean room certified according to ISO 14644-1.<br>The product is end capped and sealed with recyclable thermo-shrinkable plastic film, to avoid contamination. |
| INSTALLATION: | See IMI – Installation and maintenance instructions. |

| CE MARKING – GROUP 2 (PED – EUROPEAN DIRECTIVE) | |
|---|---|
| **PN 40** | **CATEGORY** |
| 21/2" to 4" – DN 65 to 100 | 1 (CE marked) |


We reserve the right to change the design and material of this product without notice.

## PRESSURE / TEMPERATURE LIMITS

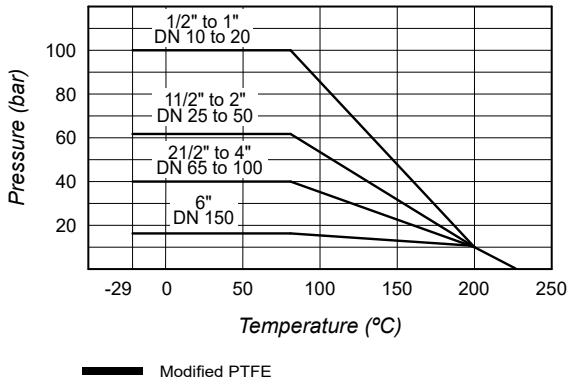


Remark: Maximum operating conditions may be limited by the valve end connections due to normative restrictions.

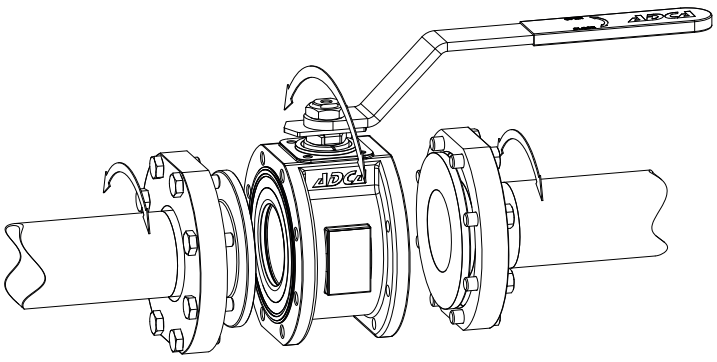

*Tube weld easy and quick installation*

Valves with tube weld (ETO) connections are fitted, as standard, with loose body flanges which allow installation with no need to align the end connections. After installation the valve can rotate freely 360º to the desired orientation.

## LEVER OPTIONS

| FLAT LEVER | FLAT LEVER WITH LOCKING SYSTEM |
|---|---|
|  |  |

## STEM EXTENSION UNITS *

| SEF/H | SEF/P | SEF/A |
|---|---|---|
|  | 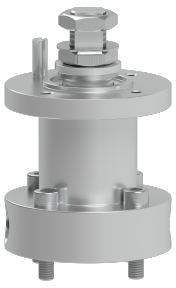 | 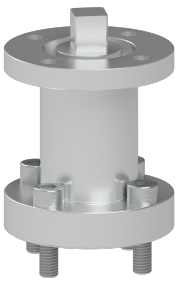 |

* Consult IS M3H.100 – Sanitary Ball Valves Additional Options and Extras – for further information.



We reserve the right to change the design and material of this product without notice.

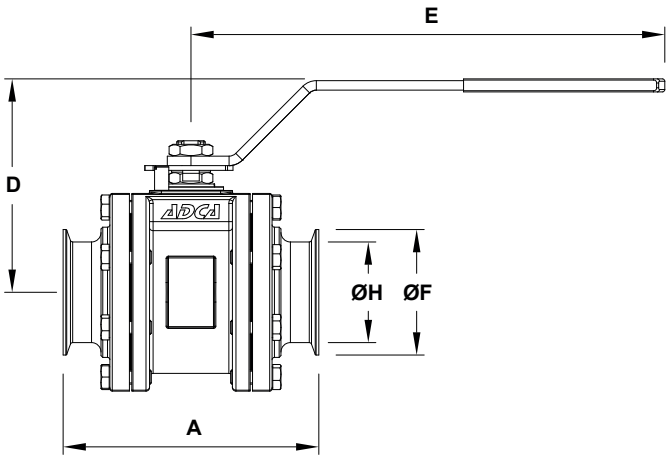


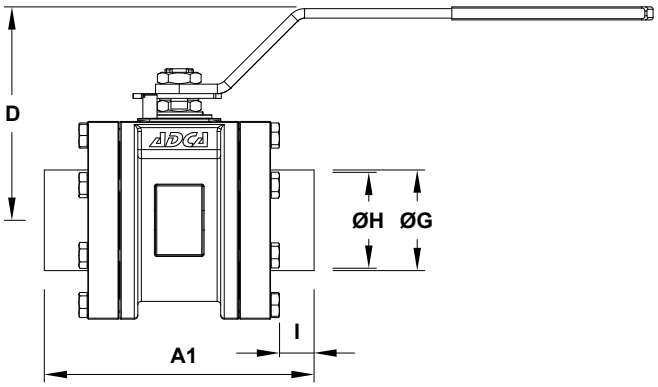


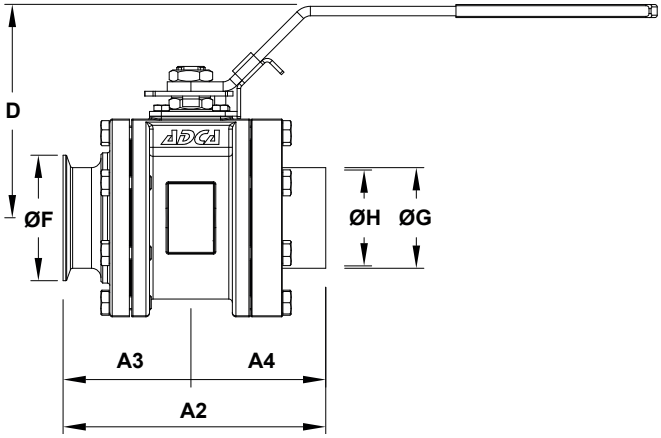


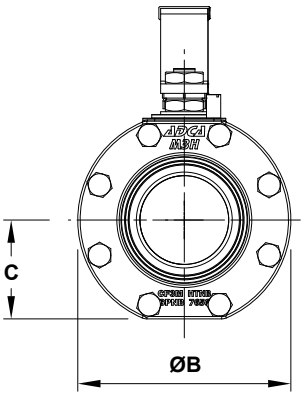


| DIMENSIONS – ASME BPE (mm) | | | | | | | | | | | | | | | | |
|---|---|---|---|---|---|---|---|---|---|---|---|---|---|---|---|---|
| **SIZE** | **A** | **A1** | **A2** | **A3** | **A4** | **ØB** | **C** | **D** | **E** | **ØF** | **ØG** | **ØH** | **I** | **BALL PORT** | **ISO 5211** | **WGT. (kg)** |
| **21/2"** | 190 | 203 | 196,3 | 95 | 101,5 | 160 | 72,5 | 169 | 394 | 77,4 | 63,5 | 60,2 | 37 | 60,2 | F7 | 13,3 |
| **3"** | 216 | 228 | 222 | 108 | 114 | 180 | 83,5 | 180 | 394 | 90,9 | 76,2 | 72,9 | 38 | 72,9 | F7 | 18,6 |
| **4"** | 254 | 267 | 260,5 | 127 | 133,5 | 220 | 101,5 | 198 | 394 | 118,9 | 101,6 | 97,4 | 44 | 97,4 | F10 | 29,6 |

| DIMENSIONS – DIN (mm) | | | | | | | | | | | | | | | | |
|---|---|---|---|---|---|---|---|---|---|---|---|---|---|---|---|---|
| **SIZE** | **A** | **A1** | **A2** | **A3** | **A4** | **ØB** | **C** | **D** | **E** | **ØF** | **ØG** | **ØH** | **I** | **BALL PORT** | **ISO 5211** | **WGT. (kg)** |
| **65** | 190 | 203 | 197 | 95 | 101,5 | 160 | 72,5 | 169 | 394 | 91 | 70 | 66 | 37 | 62 | F7 | 13,3 |
| **80** | 216 | 228 | 222 | 108 | 114 | 180 | 83,5 | 180 | 394 | 106 | 85 | 81 | 38 | 75 | F7 | 18,6 |
| **100** | 255 | 267 | 261 | 127,5 | 130,5 | 220 | 101,5 | 198 | 394 | 119 | 104 | 100 | 44 | 98 | F10 | 29,6 |

| DIMENSIONS – ISO (mm) | | | | | | | | | | | | | | | | |
|---|---|---|---|---|---|---|---|---|---|---|---|---|---|---|---|---|
| **SIZE** | **A** | **A1** | **A2** | **A3** | **A4** | **ØB** | **C** | **D** | **E** | **ØF** | **ØG** | **ØH** | **I** | **BALL PORT** | **ISO 5211** | **WGT. (kg)** |
| **65** | – | 203 | – | – | 101,5 | 160 | 72,5 | 169 | 394 | 91 | 76,1 | 72,1 | 37 | 62 | F7 | 13,3 |
| **80** | – | 228 | – | – | 114 | 180 | 83,5 | 180 | 394 | 106 | 88,9 | 84,3 | 38 | 75 | F7 | 18,6 |
| **100** | – | 267 | – | – | 130,5 | 220 | 101,5 | 198 | 394 | 119 | 114,3 | 109,7 | 44 | 98 | F10 | 29,6 |



We reserve the right to change the design and material of this product without notice.

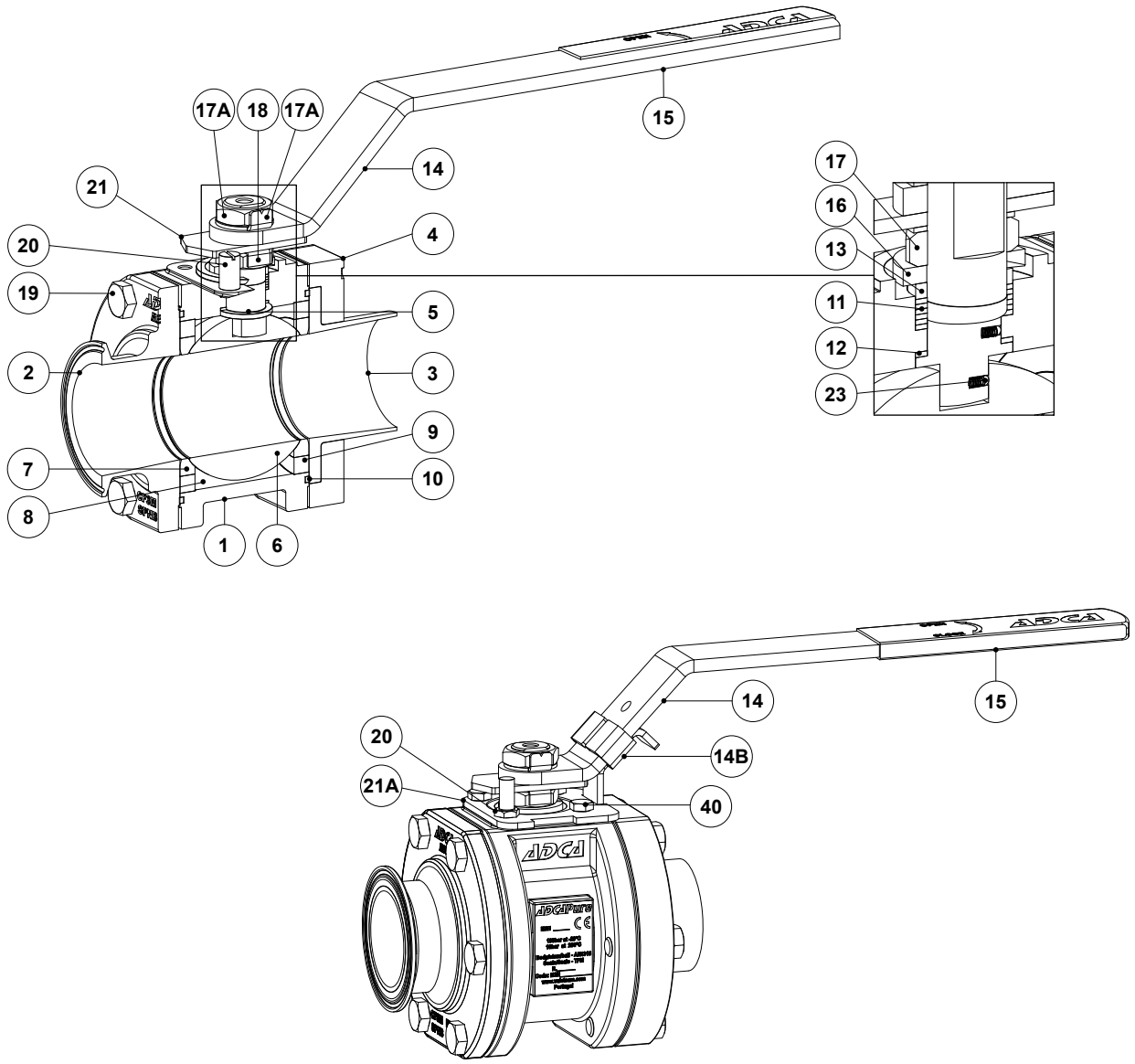


*Optional flat lever with locking system*

| MATERIALS | | | | | |
|---|---|---|---|---|---|
| **POS. No.** | **DESIGNATION** | **MATERIAL** | **POS. No.** | **DESIGNATION** | **MATERIAL** |
| **1** | Valve body | A351 CF3M / 1.4409 | **14B** | Locking piece | AISI 304 / 1.4301 |
| **2** | Clamp ferrule end connection | A351 CF3M / 1.4409 | **15** | Handle end | Vinyl |
| **3** | Tube weld end connection | AISI 316L / 1.4404; AISI 316L / 1.4435 | **16** | Spring washer | Stainless steel A2 |
| **4** | Flange | A351 CF8M / 1.4408 | **17** | Compression nut | AISI 304 / 1.4301 |
| **5** | Stem | AISI 316L / 1.4404 | **17A** | Nut | AISI 304 / 1.4301 |
| **6** | * Valve ball | AISI 316L / 1.4404 | **17B** | * Lock washer | AISI 304 / 1.4301 |
| **7** | * Standard seat | Modified PTFE | **18** | Lock washer | AISI 304 / 1.4301 |
| **8** | * Cavity filler seat | Modified PTFE | **19** | Body fixing bolt | Stainless steel A2-70 |
| **9** | Body ring | AISI 316L / 1.4404 | **20** | Stop pin | AISI 304 / 1.4301 |
| **10** | * Body seal | PTFE | **21** | Handle stopper | AISI 304 / 1.4301 |
| **11** | * Stem seal | Modified PTFE | **21A** | Locking flange | AISI 304 / 1.4301 |
| **12** | * Stem thrust seal | Modified PTFE | **23** | Antistatic device | AISI 316 / 1.4401 |
| **13** | * Spacer | AISI 316 / 1.4401 | **40** | Fixing bolt | Stainless steel A2-70 |
| **14** | Handle | AISI 304 / 1.4301 | | | |

* Available spare parts.
Remarks: FDA / USP Class VI seals certificate on request.
All valves have a serial number. In case of non-standard valves, this number must be supplied if spare parts are ordered.



We reserve the right to change the design and material of this product without notice.

| ORDERING CODES M3H | | | | | | | | | | | |
|---|---|---|---|---|---|---|---|---|---|---|---|
| **VALVE MODEL** | **MH** | **X** | **X** | **X** | **F** | **X** | **X** | **CB** | **X** | **65** | **E** |
| M3H – A351 CF3M / 1.4409 Three piece ball valve | **MH** | | | | | | | | | | |
| **LEVER HANDLE** | | | | | | | | | | | |
| Flat lever in stainless steel with plastic cover | | **X** | | | | | | | | | |
| Flat lever in stainless steel with plastic cover and locking system | | **3** | | | | | | | | | |
| Bare stem | | **9** | | | | | | | | | |
| **MATERIAL** | | | | | | | | | | | |
| A351 CF3M / 1.4409 | | | **X** | | | | | | | | |
| A351 CF3M / 1.4409 with end connections in AISI 316L / 1.4435 **(a)** | | | **G** | | | | | | | | |
| **SEAT DESIGN** | | | | | | | | | | | |
| Standard seats | | | | **X** | | | | | | | |
| Cavity fillers | | | | **F** | | | | | | | |
| **SEAT MATERIAL** | | | | | | | | | | | |
| Modified PTFE | | | | | **F** | | | | | | |
| **SURFACE FINISH (b)** | | | | | | | | | | | |
| Standard surface finish | | | | | | **X** | | | | | |
| Electropolished internal wetted parts (SF5) | | | | | | **E** | | | | | |
| **SPECIAL FEATURES** | | | | | | | | | | | |
| None | | | | | | | **X** | | | | |
| Degreased for oxygen | | | | | | | **O** | | | | |
| **PIPE CONNECTIONS** | | | | | | | | | | | |
| Clamp ferrule ASME BPE | | | | | | | | **CB** | | | |
| Clamp ferrule DIN (DIN 32676-A) | | | | | | | | **CD** | | | |
| Tube weld (ETO) according to ASME BPE | | | | | | | | **TB** | | | |
| Tube weld (ETO) according to DIN 11866-A (DIN 11850-2) | | | | | | | | **TD** | | | |
| Tube weld (ETO) according to DIN 11866-B (ISO 1127) | | | | | | | | **TI** | | | |
| TC/ETO combination ASME BPE | | | | | | | | **CTB** | | | |
| TC/ETO combination DIN 32676-A / DIN 11866-A | | | | | | | | **CTD** | | | |
| **BALL PORT** | | | | | | | | | | | |
| True bore (ASME BPE) or full bore (DIN and ISO) | | | | | | | | | **X** | | |
| **SIZE** | | | | | | | | | | | |
| 21/2" or DN 65 | | | | | | | | | | **65** | |
| 3" or DN 80 | | | | | | | | | | **80** | |
| 4" or DN 100 | | | | | | | | | | **100** | |
| **SPECIAL CONSTRUCTION / ADDITIONAL OPTIONS** | | | | | | | | | | | |
| Full description or additional codes have to be added in case of a non standard combination | | | | | | | | | | | **E** |

**(a)** Only available with tube weld (ETO) ends.
**(b)** Consult TIS.GIA – General information ADCAPure – for further details and other surface finish options.



We reserve the right to change the design and material of this product without notice.