FLOAT AND THERMOSTATIC STEAM TRAPS
FLT37
(Carbon steel ; 11/2" and 2" – DN 40 and DN 50)

DESCRIPTION

The ADCA FLT37 is a series of float and thermostatic steam traps with integral air vent designed for modulating discharge of condensate, ensuring maximum system heat transfer.
Typical applications include unit heaters, heat exchangers, dryers, jacketed vessels and other applications where continuous discharge is essential and high flow capacities are involved.



MAIN FEATURES

Modulating discharge of condensate at steam temperature.
Unaffected by sudden or wide load and pressure variations.
No backing-up with condensate.
Excellent air discharge through its integrated air vent.
Flow direction can be easily changed by repositioning the body in relation to the mechanism and cover.



OPTIONS: Equalizing (vent) and drain connections.
SLR – Steam lock release.
HVV – Hand vent valve.
BDV – Blowdown valve.
AFZ – Anti-freeze device.
FLL – Float lifting lever.
VB21M – Vacuum breaker.

USE: Saturated and superheated steam.

AVAILABLE MODELS: FLT37-4,5, FLT37-10, FLT37-21 and FLT37-32 – carbon steel.

SIZES: 11/2" and 2"; DN 40 and DN 50.

CONNECTIONS: Female threaded ISO 7 Rp or NPT.
Flanged EN 1092-1 PN 40.
Flanged ASME B16.5 Class 150 or 300.
Socket weld (SW) ASME B16.11.

INSTALLATION: Horizontal or vertical installation.

ΔPMX: FLT37-4,5 – 4,5 bar
FLT37-10 – 10 bar
FLT37-21 – 21 bar
FLT37-32 – 32 bar

CE MARKING – GROUP 2 (PED – EUROPEAN DIRECTIVE)		
CLASS 150	**PN 40**	**CATEGORY**
11/2" and 2" DN 40 and 50	–	SEP
–	11/2" and 2" DN 40 and 50	1 (CE marked)

BODY LIMITING CONDITIONS		
FLANGED PN 40 / CLASS 300 *	**FLANGED CLASS 150 ****	**RELATED TEMPERATURE**
ALLOWABLE PRESSURE	**ALLOWABLE PRESSURE**	
40 bar	17,7 bar	100 ºC
40 bar	14 bar	200 ºC
39 bar	12,1 bar	250 ºC
35,2 bar	10,2 bar	300 ºC

PMO – Maximum operating pressure: 32 bar.
TMO – Maximum operating temperature: 250 ºC.
* According to EN 1092-1:2018.
** According to EN 1759-1:2004.
Body limiting conditions PN 40 or below, depending on the type of connection adopted. Rating PN 40 for threaded and SW versions.

We reserve the right to change the design and material of this product without notice.

FLOW RATE CAPACITY (kg/h)														
MODEL	SIZE	DIFFERENTIAL PRESSURE (bar)												
		0,5	1	1,5	2	4,5	7	10	12	14	16	21	25	32
FLT37-4,5	11/2" and 2" – DN 40 and 50	2400	3400	3900	4500	7300	–	–	–	–	–	–	–	–
FLT37-10	11/2" and 2" – DN 40 and 50	1500	2000	2600	3000	4000	5400	6200	–	–	–	–	–	–
FLT37-21	11/2" and 2" – DN 40 and 50	950	1300	1600	1800	2600	3250	3900	4210	4950	5000	5600	–	–
FLT37-32	11/2" and 2" – DN 40 and 50	950	1300	1600	1800	2600	3250	3900	4210	4950	5000	5600	6000	6500

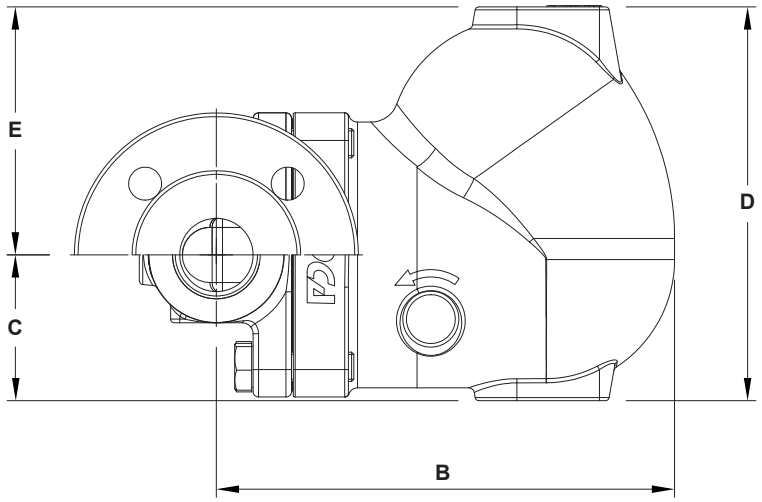

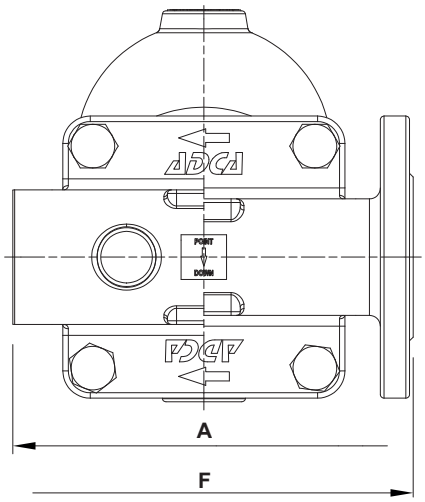

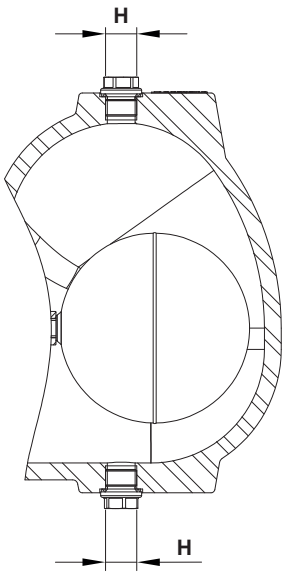

DIMENSIONS (mm)													
SIZE	THREADED / SW							PN 40		CLASS 150		CLASS 300	
	A	B	C	D	E	H *	WEIGHT (kg)	F	WEIGHT (kg)	F	WEIGHT (kg)	F	WEIGHT (kg)
11/2" – DN 40	210	250	80	215	136	3/8"	19	230	21,9	230	20,4	230	21,7
2" – DN 50	210	250	80	215	136	3/8"	18,4	230	23,8	230	21,7	230	23,4

* As standard, in versions with EN flanges and female ISO 7 Rp threads, these connections are female threaded ISO 228. In versions with ASME flanges, female NPT threads or SW, these connections are female threaded NPT.

We reserve the right to change the design and material of this product without notice.

MATERIALS

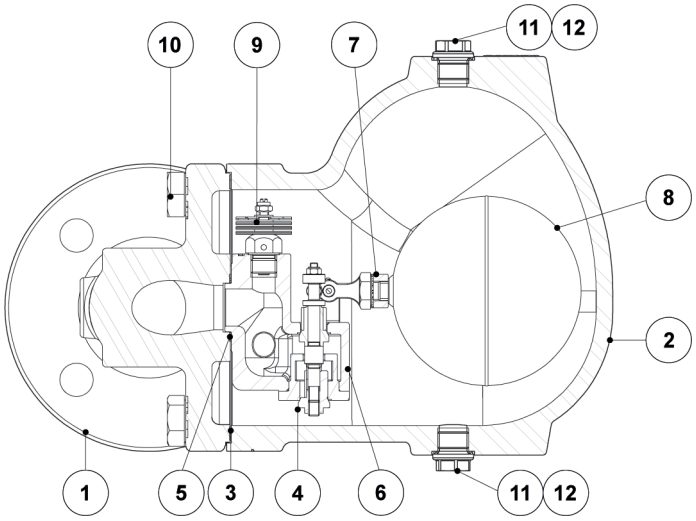

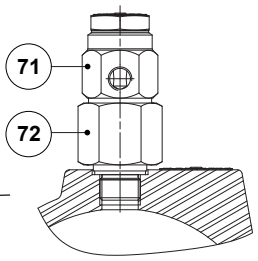

Optional vacuum breaker (VB21M)

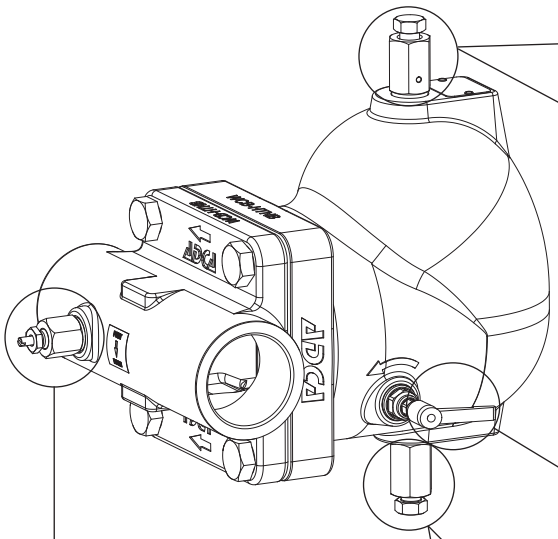

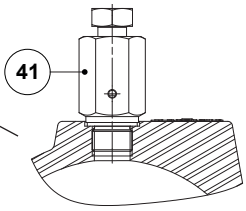

Optional hand vent valve (HVV)

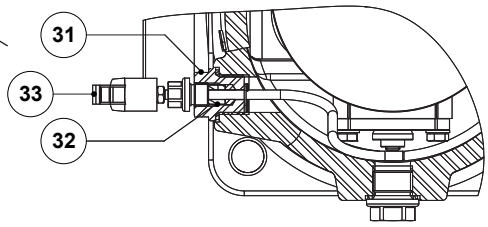

Optional float lifting lever (FLL)

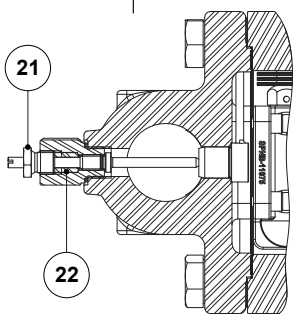

Optional steam lock release (SLR)

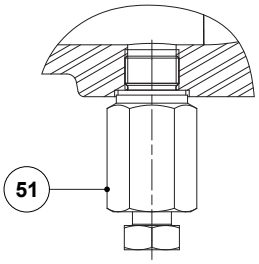

Optional blowdown valve (BDV); Manual

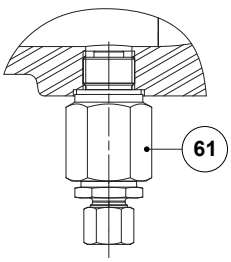

Optional anti-freeze device (AFZ); Automatic

We reserve the right to change the design and material of this product without notice.

MATERIALS		
POS. No.	**DESIGNATION**	**MATERIAL**
1	Body	A216 WCB / 1.0619
2	Cover	A216 WCB / 1.0619
3	* Gasket	Stainless steel / Graphite
4	* Seat	A351 CF8 / 1.4308; A276-98B / 1.4057
5	* Gasket	Graphite
6	* Valve	AISI 316 / 1.4401; AISI 420 / 1.4021
7	* Lever	A351 CF8M / 1.4408
8	* Float	AISI 304 / 1.4301
9	* Automatic air vent	Stainless steel (bimetallic)
10	Bolt	Zinc plated steel
11	Plug	AISI 316L / 1.4404
12	** Gasket	Copper; AISI 304 / 1.4301
21	Steam lock release	AISI 420 / 1.4021; AISI 316L / 1.4404
22	Packing	Graphite
31	Lever mechanism	AISI 303 / 1.4305; AISI 304 / 1.4301; AISI 316L / 1.4404
32	Packing	Graphite
33	Lever	Plastic
41	Hand vent valve	AISI 303 / 1.4305; AISI 316L / 1.4404
51	Blowdown valve	AISI 303 / 1.4305; AISI 316L / 1.4404
61	Anti-freeze device	AISI 303 / 1.4305; AISI 316L / 1.4404
71	Vacuum breaker	AISI 303 / 1.4305
72	Adapter fitting	AISI 303 / 1.4305

* Available spare parts; ** Not applicable in NPT version.

FLOW DIRECTION

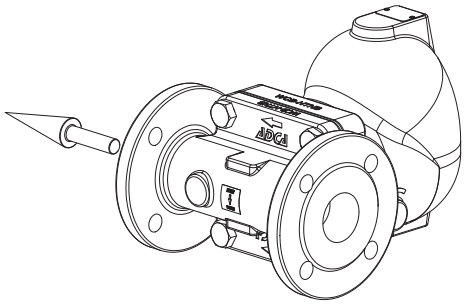

IR – Horizontal from right to left

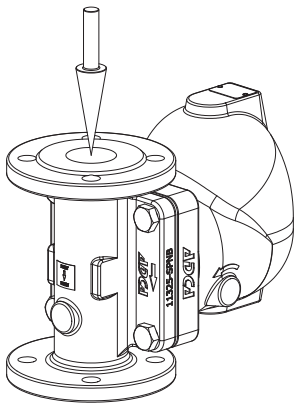

IT – Vertical from top to bottom

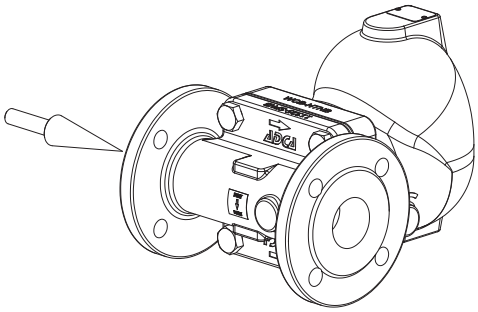

IL – Horizontal from left to right

We reserve the right to change the design and material of this product without notice.

ORDERING CODES FLT37

MODEL	A37	2	V	XX	X	X	IR	A	40	
FLT37 – A216 WCB / 1.0619 carbon steel	**A37**									
MAXIMUM ALLOWABLE DIFFERENTIAL PRESSURE (ΔPMX)										
4,5 bar		**2**								
10 bar		**3**								
21 bar		**4**								
32 bar		**5**								
AUTOMATIC AIR VENT										
Bimetallic air vent (standard)			**V**							
None			**X**							
COVER CONNECTIONS										
None				**XX**						
3/8" threaded connections on top and bottom, closed with plugs (mandatory if any options are considered)				**10**						
OPTIONS										
If any, these have specific separate ordering codes, please refer to the appropriate documentation										
SLR – STEAM LOCK RELEASE										
None					**X**					
With steam lock release assembled					**S**					
FLL – FLOAT LIFTING LEVER										
None						**X**				
Lifting lever on the right side (when facing the steam trap body)						**R**				
Lifting lever on the left side (when facing the steam trap body)						**L**				
FLOW DIRECTION										
Horizontal from right to left (standard)							**IR**			
Horizontal from left to right							**IL**			
Vertical from top to bottom							**IT**			
PIPE CONNECTIONS										
Female threaded ISO 7 Rp								**A**		
Female threaded NPT								**C**		
Socket weld (SW) ASME B16.11								**H**		
Flanged EN 1092-1 PN 40								**N**		
Flanged ASME B16.5 Class 150								**U**		
Flanged ASME B16.5 Class 300								**V**		
SIZE										
11/2" or DN 40									**40**	
2" or DN 50									**50**	
SPECIAL CONSTRUCTION / ADDITIONAL OPTIONS										
A full description must to be provided and validated in case of a non-standard construction										**E**

We reserve the right to change the design and material of this product without notice.