PRESSURE SUSTAINING VALVES
PSW46B
(EN)

DESCRIPTION

The ADCA PSW46B series pressure sustaining valves are single seated, diaphragm or piston sensing proportional controllers that operate without auxiliary energy.
Designed for use with water, compressed air and other liquids and gases compatible with the construction.

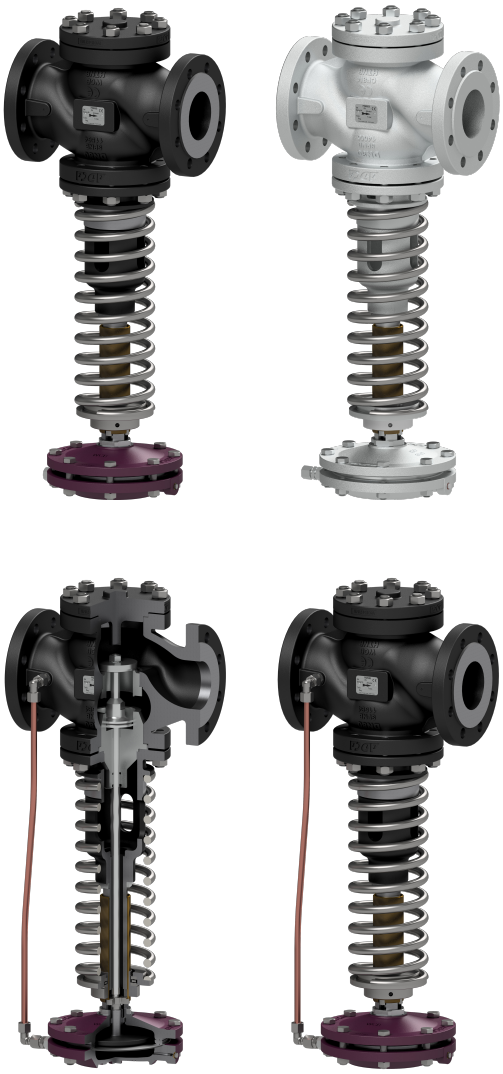

MAIN FEATURES

Pressure balancing through robust piston design.
Soft sealing to meet tight shut-off requirements.
Robust construction (fit-and-forget).
Interchangeable actuators and adjustment springs.

OPTIONS:	Sensing line connection on body.
USE:	Water, compressed air and other liquids or gases compatible with the construction.
AVAILABLE MODELS:	PSW46BS – carbon steel. PSW46Bi – stainless steel.
SIZES:	DN 50 to DN 100.
CONNECTIONS:	Flanged EN 1092-1 PN 16 or PN 40. Flanged ASME B16.5 Class 150 on request (drilled from EN casting). Standard PN 16 DN 65 flanges are supplied with 4 holes. 8 holes, according to EN 1092-1/-2 on request.
AVAILABLE ACTUATORS:	A1A, A11A, A3A, A4A and P55 – carbon steel. A2A and A21A – SG iron or carbon steel. A1Ai, A11Ai, A2Ai, A21Ai, A3Ai, A4Ai and P55i – stainless steel.
INSTALLATION:	See IMI – Installation and maintenance instructions.

CE MARKING – GROUP 2 (PED – EUROPEAN DIRECTIVE)		
PN 16	**PN 40**	**CATEGORY**
DN 50	–	SEP
DN 65 to 100	DN 50 to 100	1 (CE marked)

We reserve the right to change the design and material of this product without notice.

LIMITING CONDITIONS – VALVE		
MODEL	**PSW46BS and PSW46Bi**	
Body design conditions	PN 16	PN 40
Maximum upstream pressure	13 bar	18 bar
Maximum downstream pressure	13 bar	18 bar
Minimum upstream pressure	0,2 bar	0,2 bar
Maximum operating temperature	130 ºC	130 ºC
Maximum hydraulic factory valve body test	24 bar	60 bar

Warning: A pressure sustaining valve is not a safety relief valve and must not be used for that purpose!

LIMITING CONDITIONS – ACTUATOR							
ACTUATOR MODEL	**A1A A1Ai**	**A11A A11Ai**	**A21A A21Ai**	**A2A A2Ai**	**A3A A3Ai**	**A4A A4Ai**	**P55 P55i**
Maximum operating pressure (bar)	25	25	18	12	2,5	1,5	25
Maximum operating temperature	90 ºC *						130 ºC

* See “Sensing Line Connection Options” table.

FLOW RATE COEFFICIENTS (m^3/h)				
SIZE	**DN 50**	**DN 65**	**DN 80**	**DN 100**
Kvs	26,5	51,5	79,5	129,5

ACTUATOR AND SPRING SELECTION TABLE									
SIZE		**A4A A4Ai**		**A3A A3Ai**	**A2A A2Ai**	**A21A A21Ai**	**A1A A1Ai**	**A11A A11Ai**	**P55 P55i**
DN 50	Regulating range (bar)	0,2 to 0,4	0,3 to 0,9	0,5 to 1,5	1 to 3,2	1,4 to 4,8	2,5 to 7	3 to 10	8 to 18
	Spring No.	67	61	61	61	61	61	61	61
DN 65	Regulating range (bar)	0,2 to 0,4	0,3 to 0,9	0,5 to 1,5	1 to 3,2	1,4 to 4,8	2,5 to 7	3 to 10	8 to 18
	Spring No.	67	61	61	61	61	61	61	61
DN 80	Regulating range (bar)	0,2 to 0,4	0,3 to 0,9	0,4 to 1,4	0,6 to 3	0,8 to 4,2	2 to 6	3 to 8	6 to 16
	Spring No.	68	62	62	62	62	62	62	62
DN 100	Regulating range (bar)	0,2 to 0,4	0,3 to 0,9	0,4 to 1,4	0,6 to 3	0,8 to 4,2	2 to 6	3 to 8	6 to 18
	Spring No.	69	63	63	63	63	63	63	63

We reserve the right to change the design and material of this product without notice.

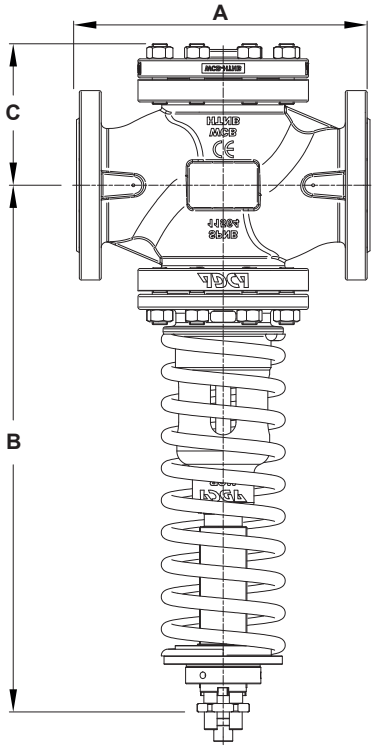

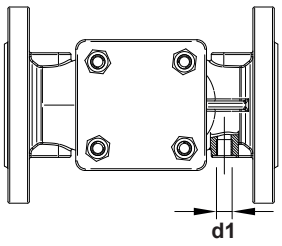

Optional sensing line connection on body

DIMENSIONS – VALVE (mm)				
DIMENSION	**SIZE**			
	DN 50	**DN 65**	**DN 80**	**DN 100**
A	230	290	310	350
B	470	495	556	597
C	113	150	150	164
d1	1/4"	1/4"	1/4"	1/4"
WEIGHT (kg)	25,4	43,5	57,3	74,3

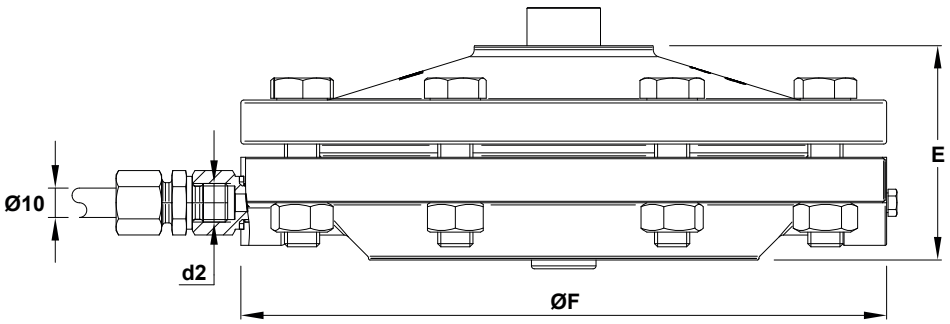

A series actuators

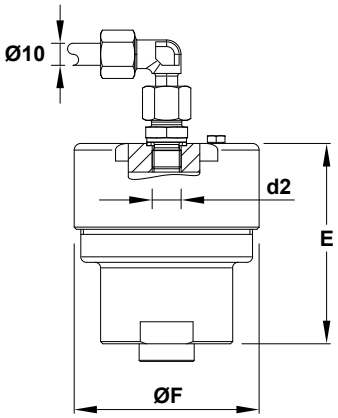

P series actuators

DIMENSIONS – ACTUATOR (mm)							
DIMENSION	**ACTUATOR**						
	A1A A1Ai	**A11A A11Ai**	**A2A A2Ai**	**A21A A21Ai**	**A3A A3Ai**	**A4A A4Ai**	**P55 P55i**
d2	1/4"	1/4"	1/4"	1/4"	1/4"	1/4"	1/4"
E	74	74	80	80	82	92	91
ØF	172	172	220	220	282	340	84
WEIGHT (kg)	5,8	5,8	10,2	10,2	12,6	18,3	2,7

We reserve the right to change the design and material of this product without notice.

SENSING LINE CONNECTION OPTIONS

EXTERNAL SENSING LINE	SENSING LINE CONNECTION ON BODY
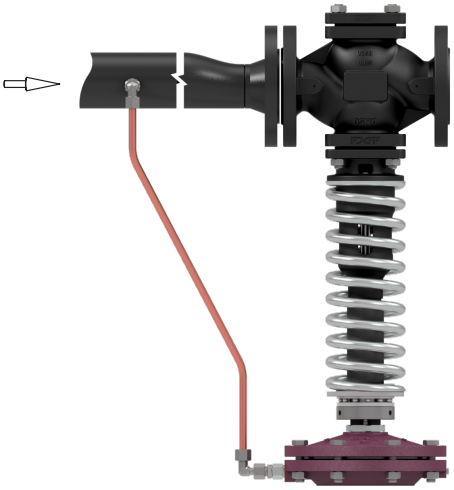	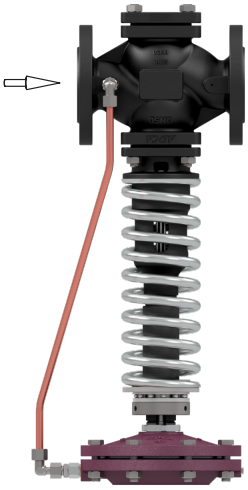
For use with liquids below 130 ºC. For use with gases below 90 °C. For gases between 90 ºC and 130 °C, please consult the manufacturer. Installation with the actuator oriented upwards is also acceptable. The sensing line should be connected at least 1 meter upstream of the valve inlet.	For use with liquids below 130 ºC. For use with gases below 90 °C. For gases between 90 ºC and 130 °C, please consult the manufacturer. Installation with the actuator oriented upwards is also acceptable. The valve can be supplied with the sensing tube factory-installed. If not supplied installed, the connection at the body is delivered closed with a plug. The image shows the connection and sensing tube positioned on the left side relative to the flow direction. If installation constraints require, the connection may also be made on the right side.

MATERIALS

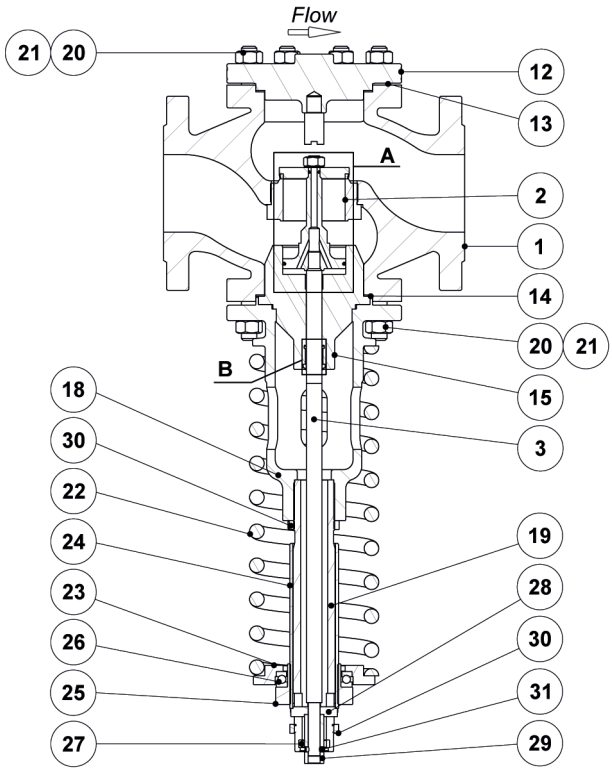

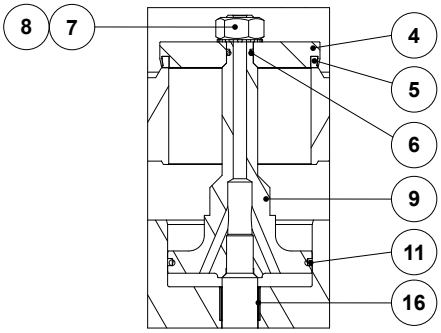

Detail A

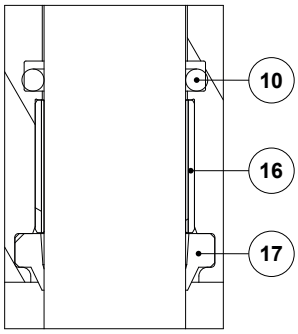

Detail B

We reserve the right to change the design and material of this product without notice.

MATERIALS – VALVE		
POS. No.	**DESIGNATION**	**MATERIAL**
1	Valve body (PSW46BS)	A216 WCB / 1.0619
	Valve body (PSW46Bi)	A351 CF8M / 1.4408
2	* Seat	AISI 316 / 4.4401
3	* Stem	AISI 304 / 1.4301
4	* Valve plug	AISI 316 / 4.4401
5	* Seal ring	** EPDM
6	* O-ring	** EPDM
7	Nut	Stainless steel A2-70
8	Washer	Stainless steel A2
9	Piston	AISI 316 / 4.4401
10	* O-ring	** EPDM
11	* O-ring	** EPDM
12	Cover (PSW46BS)	A216 WCB / 1.0619
	Cover (PSW46Bi)	A351 CF8M / 1.4408
13	* Gasket	Stainless steel / Graphite
14	* Gasket	Stainless steel / Graphite
15	Guide tube	AISI 304 / 1.4301
16	Plain bearing	Bronze / PTFE
17	Scraper	FPM; NBR
18	Piston body (PSW46BS)	A216 WCB / 1.0619
	Piston body (PSW46Bi)	A351 CF8M / 1.4408
19	Piston body extension (PSW46BS)	P355T1 / 1.0421
	Piston body extension (PSW46Bi)	AISI 304 / 1.4301
20	Stud (PSW46BS)	Steel 8.8; EN 10269 steel
	Stud (PSW46Bi)	Stainless steel A2-70
21	Nut (PSW46BS)	Steel 8.8; EN 10269 steel
	Nut (PSW46Bi)	Stainless steel A2-70
22	* Adjustment spring	Spring steel
23	Lower spring plate (PSW46BS)	C45E / 1.1191
	Lower spring plate (PSW46Bi)	AISI 304 / 1.4301
24	Threaded tube	CuZn39Pb3
25	Spring adjusting nut	AISI 304 / 1.4301
26	Ball bearing	Zinc plated steel
27	Spacer (PSW46BS)	S355J2G3 / 1.0570
	Spacer (PSW46Bi)	AISI 304 / 1.4301
28	Pressure star (PSW46BS)	S235JR / 1.0038
	Pressure star (PSW46Bi)	AISI 304 / 1.4301
29	Pressure tube (PSW46BS)	C45E / 1.1191
	Pressure tube (PSW46Bi)	AISI 304 / 1.4301
30	Lock nut	AISI 303 / 1.4305
31	Pin	AISI 303 / 1.4305

* Available spare parts. ** Others on request.

We reserve the right to change the design and material of this product without notice.

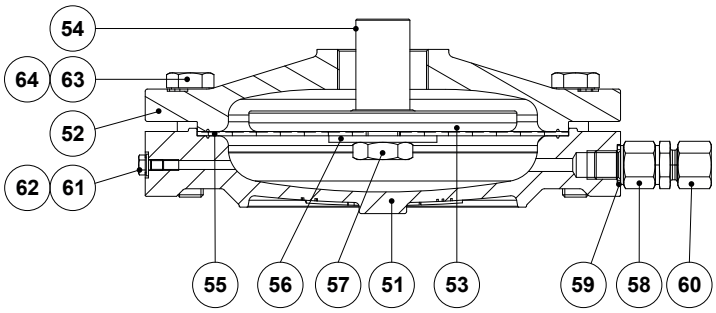

A series actuators

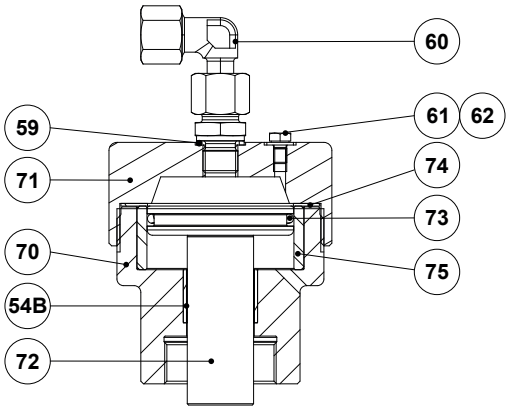

P series actuators

MATERIALS – ACTUATOR						
POS. No.	**DESIGNATION**	**A1A, A11A, A3A and A4A**	**A2A and A21A**	**A1Ai, A11Ai, A2Ai, A21Ai, A3Ai and A4Ai**	**P55**	**P55i**
51	Lower diaph. chamber	A216 WCB / 1.0619	GJS-400-15 / 0.7040; A216 WCB / 1.0619	A351 CF8M / 1.4408	–	–
52	Upper diaph. chamber	A216 WCB / 1.0619	GJS-400-15 / 0.7040; A216 WCB / 1.0619	A351 CF8M / 1.4408	–	–
53	Pressure plate	A216 WCB / 1.0619	GJS-400-15 / 0.7040	A351 CF8M / 1.4408; AISI 304 / 1.4301	–	–
54	Diaph. plate spindle	A216 WCB / 1.0619	GJS-400-15 / 0.7040	A351 CF8M / 1.4408; AISI 304 / 1.4301	–	–
54B	Plain bearing	–	–	–	Steel	Bronze / PTFE
55	* Diaphragm	Neoprene reinforced polyamide	Neoprene reinforced polyamide	Neoprene reinforced polyamide	–	–
56	Washer	Copper	Copper	AISI 304 / 1.4301	–	–
57	Hex nut	CuZn39Pb3	CuZn39Pb3	AISI 304 / 1.4301	–	–
58	Flow restrictor	AISI 303 / 1.4305	AISI 303 / 1.4305	AISI 303 / 1.4305	–	–
59	Gasket	Copper	Copper	Copper	Copper	Copper
60	Compression fitting	AISI 316Ti / 1.4571	AISI 316Ti / 1.4571	AISI 316Ti / 1.4571	AISI 316Ti / 1.4571	AISI 316Ti / 1.4571
61	Vent screw	Zinc plated steel	Zinc plated steel	AISI 304 / 1.4301	Zinc plated steel	St. steel A2-70
62	Washer	Copper	Copper	AISI 304 / 1.4301	Copper	Copper
63	Bolt	Zinc plated steel	Zinc plated steel	AISI 304 / 1.4301	–	–
64	Nut	Zinc plated steel	Zinc plated steel	AISI 304 / 1.4301	–	–
66	Spacer ring	S355JR / 1.0045	S355JR / 1.0045	–	–	–
70	Body	–	–	–	S235JR / 1.0038	AISI 316 / 1.4401
71	Cover	–	–	–	S235JR / 1.0038	AISI 316 / 1.4401
72	Piston	–	–	–	AISI 316 / 1.4401	AISI 316 / 1.4401
73	* O-ring	–	–	–	EPDM	EPDM
74	* Gasket	–	–	–	Stainless steel / Graphite	Stainless steel / Graphite
75	Piston sleeve	–	–	–	AISI 304 / 1.4301	AISI 304 / 1.4301

* Available spare parts.

We reserve the right to change the design and material of this product without notice.

ORDERING CODES PSW46B											
VALVE MODEL	**PSW46B**	**1**	**S**	**61**	**E**	**0**	**XX**	**X**	**L**	**50**	
PSW46B – Pressure sustaining valve	**PSW46B**										
VALVE SERIES											
Series 1		**1**									
BODY MATERIAL											
A216 WCB / 1.0619 carbon steel			**S**								
A351 CF8M / 1.4408 stainless steel			**I**								
SPRING No.											
61 (DN 50 and DN 65)				**61**							
62 (DN 80)				**62**							
63 (DN 100)				**63**							
67 (DN 50 and DN 65)				**67**							
68 (DN 80)				**68**							
69 (DN 100)				**69**							
VALVE SEALING											
Soft sealed with EPDM					**E**						
SENSING LINE CONNECTION ON BODY (a)											
Without sensing line connection on body						**0**					
Threaded connection on the right side, relative to flow direction						**3**					
Threaded connection on the left side, relative to flow direction (non-standard construction)						**4**					
Threaded connection on both sides (non-standard construction)						**2**					
OPTIONS											
Standard valve							**XX**				
Valve with carbon steel piston body (only for PSW46Bi)							**XS**				
SPECIAL FEATURES											
None								**X**			
PIPE CONNECTIONS											
Flanged EN 1092-1 PN 16									**L**		
Flanged EN 1092-1 PN 40									**N**		
Flanged ASME B16.5 Class 150									**U**		
SIZE											
DN 50										**50**	
DN 65										**65**	
DN 80										**80**	
DN 100										**100**	
SPECIAL CONSTRUCTION / ADDITIONAL OPTIONS											
Full description or additional codes have to be added in case of non-standard combination											**E**

(a) Connections are closed with plugs in case the valve is not supplied with the tube pre-assembled from factory.

HOW TO ORDER

Indicate the complete valve ordering code together with the required actuator size. If the valve is to be supplied with factory-installed sensing tube, it must be stated in the order.
Example: PSW46B1S61E4XXXL50 fitted with A2 actuator and sensing line connection on body.