AUTOMATIC AIR AND GAS VENTS FOR LIQUID SYSTEMS
AE30

DESCRIPTION

The ADCA AE30 all stainless steel sealed body air eliminator removes air from hot and superheated water systems and is also suitable for all liquids compatible with the construction, providing that their specific weight is not less than 0,75 kg/dm³.
This ball float type automatic air eliminator can be used in combination with other air elimination and separation systems or directly applied at high points in the piping.

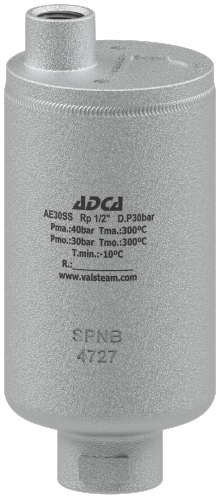

MAIN FEATURES

Corrosion resistant.

USE: Cold, hot and superheated water systems.

AVAILABLE MODELS: AE30SS – stainless steel.

SIZES: 1/2" and 3/4".

CONNECTIONS: Female threaded ISO 7 Rp or NPT.
1/2" or 3/4" vertical inlet.
1/2" vertical outlet.

INSTALLATION: Vertical installation. It must be installed absolutely vertically at the points in the plant where the air tends to collect. The drain should be piped to a safe position.
See IMI – Installation and maintenance instructions.

CE MARKING – GROUP 2 (PED – EUROPEAN DIRECTIVE)	
PN 40	**CATEGORY**
1/2" and 3/4"	SEP

BODY LIMITING CONDITIONS	
THREADED PN 40 **ALLOWABLE PRESSURE**	**RELATED TEMPERATURE**
40 bar	100 ºC
33,7 bar	200 ºC
31,8 bar	250 ºC
29,7 bar	300 ºC

PMO – Maximum operating pressure: 30 bar.
TMO – Maximum operating temperature: 300 ºC.
Minimum liquid specific weight: 0,75 kg/dm³.
Maximum working differential pressure: 30 bar.

FLOW RATE CAPACITY (NL/min)

SIZE	DIFFERENTIAL PRESSURE (bar)																	
	0,5	1	2	3	4	5	6	7	8	9	10	12	15	18	20	22	25	30
1/2" and 3/4"	31	46	72	96	120	144	168	192	216	241	265	313	385	457	505	553	626	746

Values shown refer to capacities of air discharge at 15 ºC, under average atmospheric pressure (1013 mbar).
If the air temperature differs from 15 ºC, the discharge capacity can be corrected by multiplying it by: $\frac{288}{273 + T}$, where T is the actual temperature in ºC.
It may be assumed that the temperature of the air is equal to the temperature of the water.

We reserve the right to change the design and material of this product without notice.

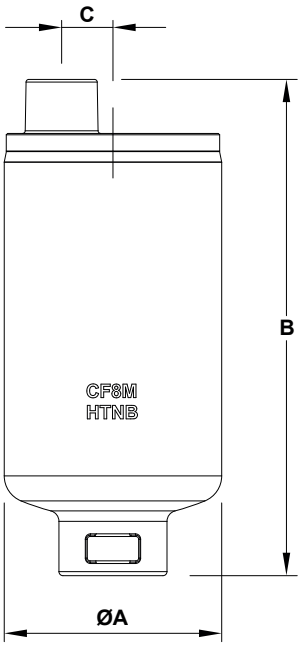

DIMENSIONS (mm)				
SIZE	**ØA**	**B**	**C**	**WEIGHT (kg)**
1/2"	80,5	187	19	2
3/4"	80,5	187	19	2

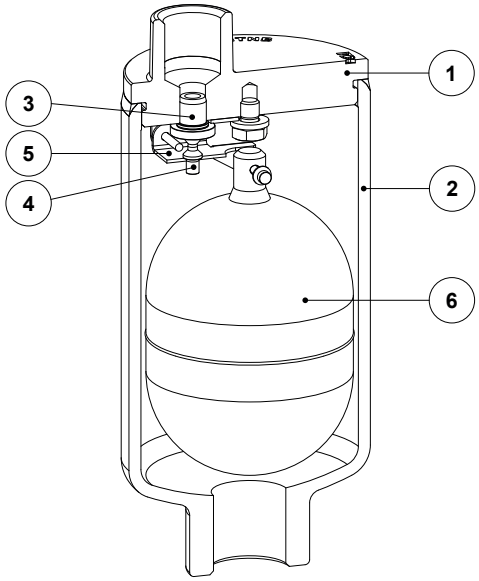

MATERIALS		
POS. No.	**DESIGNATION**	**MATERIAL**
1	Body	A351 CF8M / 1.4408
2	Cover	A351 CF8M / 1.4408
3	Seat	AISI 316 / 1.4401
4	Valve	AISI 316 / 1.4401
5	Lever mechanism	AISI 304 / 1.4301 *
6	Float	AISI 316 / 1.4401

* AISI 316 / 1.4401 on request.

We reserve the right to change the design and material of this product without notice.