PISTON SENSING PRESSURE REDUCING VALVES
P20P

DESCRIPTION

The ADCA P20P is a series of direct acting, spring loaded, piston sensing pressure reducing valves.
These regulators are designed for use with nitrogen, compressed air, water and other gases and liquids compatible with the materials of construction.
They are suitable for general purpose pressure reducing applications such as instrumentation systems and industrial equipment where small loads and high pressures are involved.



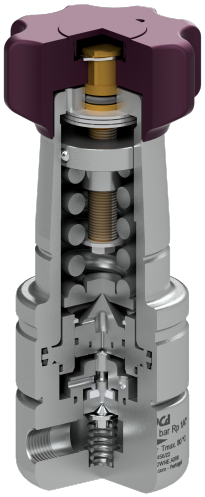

MAIN FEATURES

Compact design.
Machined from bar stock materials.
Non-rising adjustment knob.
Ultrasonically cleaned and degreased.

OPTIONS: Leakage line connection.
Top cap (adjustment screw with cover).
Gauge connection on body.
Different soft valves for liquids and gases.
Degreased for oxygen application.
Panel mounting.
Bottom mounting.
Self relieving.

USE: Compressed air, water and other gases and liquids compatible with the construction.

AVAILABLE MODELS: P20P – stainless steel, piston sensing, low flow.

SIZES: 1/4".

CONNECTIONS: Female threaded ISO 7 Rp, ISO 228 or NPT.

INSTALLATION: In any position.
See IMI – Installation and maintenance instructions.

CE MARKING – GROUP 2 (PED – EUROPEAN DIRECTIVE)	
PN 250	**CATEGORY**
1/4"	SEP

LIMITING CONDITIONS	
MODEL	**P20P**
Body design conditions	PN 250
Maximum upstream pressure	220 bar
Maximum downstream pressure	200 bar
Minimum downstream pressure	0,2 bar
Maximum design temperature	80 ºC
Maximum recommended reducing ratio	40:1

FLOW RATE COEFFICIENTS (m^3/h)			
SIZE	**1/4"**		
Kvs	0,043	0,22	0,62

We reserve the right to change the design and material of this product without notice.

OPTIONS			
LEAKAGE LINE CONNECTION	TOP CAP	GAUGE CONNECTION	PANEL MOUNTING
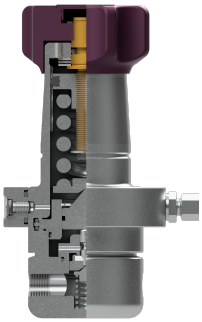			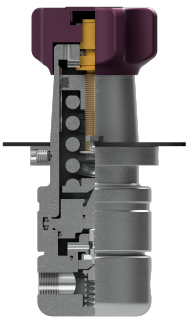

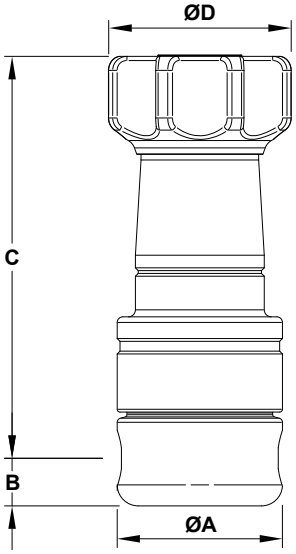

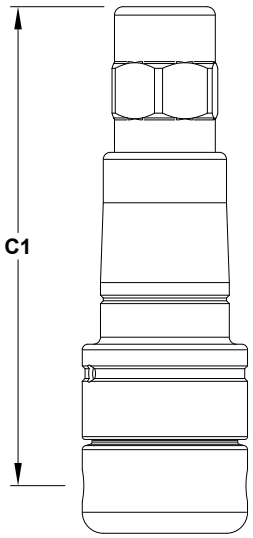

Optional top cap

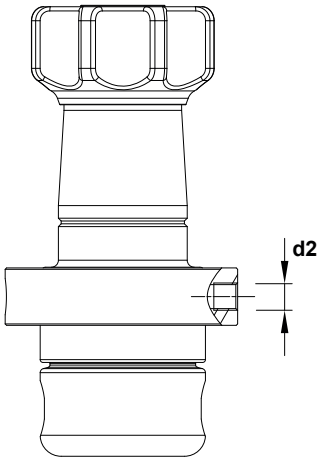

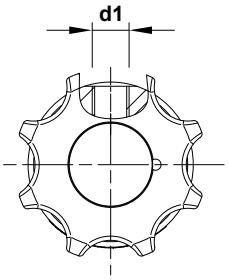

Optional leakage line (d2) and gauge (d1) connections

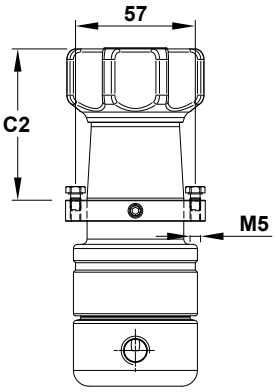

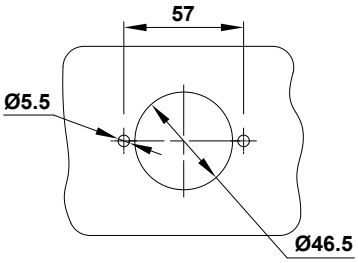

Optional panel mounting

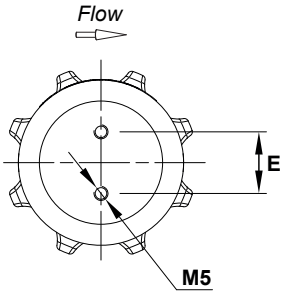

Optional bottom mounting connection

DIMENSIONS (mm)										
SIZE	ØA	B	C	C1	C2	ØD	d1	d2	E	WEIGHT (kg)
1/4"	59	17	143,5	171	72	69	1/4"	1/8"	22	2,5

Remark: As standard, in versions manufactured with ISO threads, connections d1 and d2 are female threaded ISO 228. In versions with NPT threads, these connections are female threaded NPT.

We reserve the right to change the design and material of this product without notice.

MATERIALS

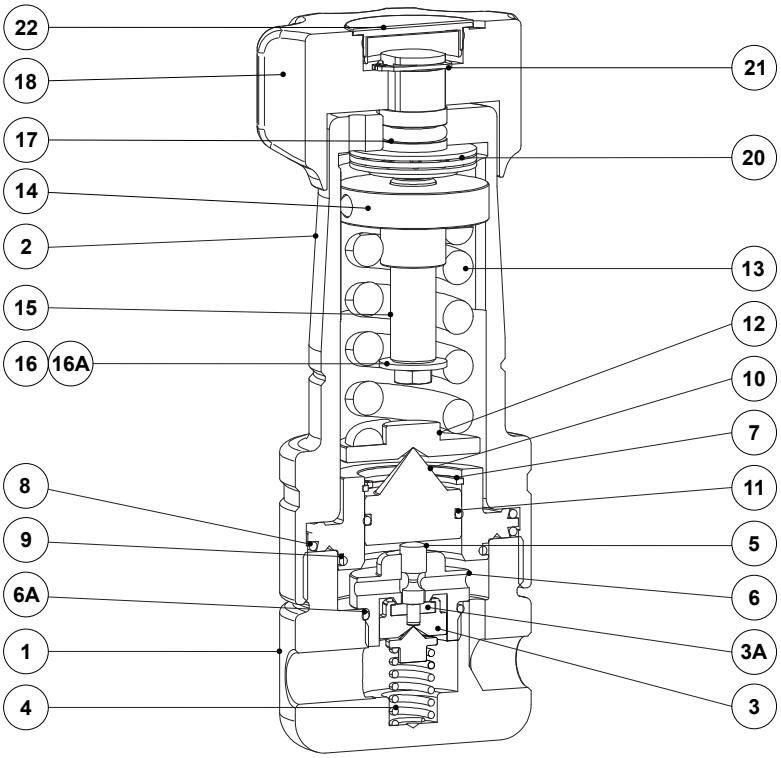

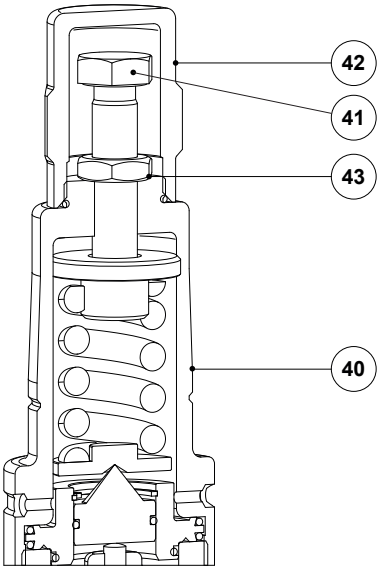

Optional top cap

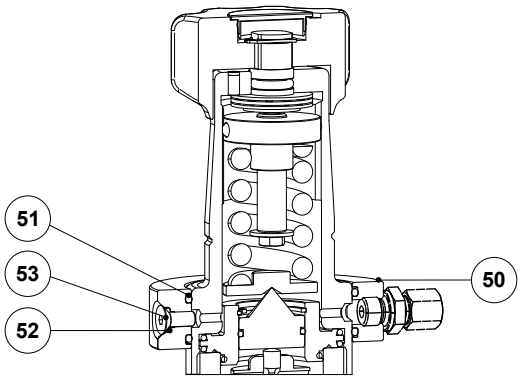

Optional leakage line connection

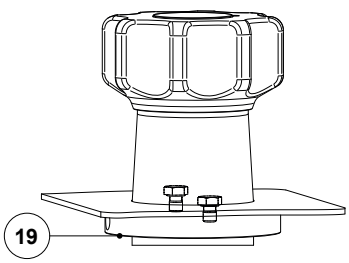

Optional panel mounting

We reserve the right to change the design and material of this product without notice.

MATERIALS		
POS. No.	**DESIGNATION**	**MATERIAL**
1	Valve body	AISI 316L / 1.4404
2	Cover	AISI 316L / 1.4404
3	* Plug	AISI 316L / 1.4404
3A	* Valve head	** NBR; EPDM; PTFE; FPM
4	* Valve spring	AISI 302 / 1.4300
5	* Pushrod	AISI 316L / 1.4404
6	Seat	AISI 316L / 1.4404
6A	* O-ring	** NBR; EPDM; FPM
7	Piston sleeve	AISI 316L / 1.4404
8	* O-ring	** NBR; EPDM; FPM
9	* O-ring	** NBR; EPDM; FPM
10	Piston	AISI 316L / 1.4404
11	* O-ring	** NBR; EPDM; FPM
12	Plate	AISI 316L / 1.4404
13	* Adjustment spring	AISI 302 / 1.4300
14	Spring guide	AISI 316L / 1.4404
15	Adjustment screw	AISI 316L / 1.4404
16	Washer	Stainless steel A2
16A	Bolt	Stainless steel A2-70
17	* O-ring	NBR
18	Adjustment knob	Painted aluminium
19	Panel mounting ring	AISI 316L / 1.4404
20	Bearing	Corrosion resistant steel
21	Shaft ring	Stainless steel
22	Cover nut	Plastic
40	Cover	AISI 316L / 1.4404
41	Adjustment screw	Stainless steel A2-70
42	Top cap	AISI 316L / 1.4404
43	Lock nut	Stainless steel A2
50	Leakage line ring	AISI 316L / 1.4404
51	O-ring	** NBR
52	O-ring	** FPM
53	Bolt	AISI 304 / 1.4301

* Available spare parts. ** Others on request.
Remark: All valves have a serial number. In case of non-standard valves this number must be supplied if spare parts are ordered.

We reserve the right to change the design and material of this product without notice.

ORDERING CODES P20P

VALVE MODEL	P20P	.	1	W	N	F				.	A	1	08	
P20P – Piston sensing pressure reducing valve	**P20P**													
REGULATING RANGE														
No. 1 – 0,2 to 1,5 bar			**1**											
No. 2 – 0,3 to 3 bar			**2**											
No. 3 – 0,8 to 8 bar			**3**											
No. 4 – 1,5 to 15 bar			**4**											
No. 5 – 3 to 30 bar			**5**											
No. 6 – 5 to 50 bar			**6**											
No. 7 – 20 to 200 bar			**7**											
APPLICATION														
Water				**W**										
Gases				**G**										
Oxygen (degreased)				**O**										
VALVE SEALING														
NBR					**N**									
EPDM					**E**									
PTFE **(a)**					**T**									
FPM					**V**									
MAXIMUM INLET PRESSURE														
220 bar						**F**								
GAUGE CONNECTIONS														
Without gauge connections							**(1)**							
Threaded gauge connection on the left side (relative to flow direction) – downstream pressure – ISO 228 G 1/4"							**4**							
Threaded gauge connection on the right side (relative to flow direction) – downstream pressure – ISO 228 G 1/4"							**3**							
Threaded gauge connections on both sides – downstream pressure – ISO 228 G 1/4"							**2**							
TOP CAP, RELIEVING AND LEAKAGE LINE CONNECTION														
Non-relieving								**(1)**						
Relieving (only for non-dangerous gases)								**R**						
Non-relieving with top cap (adjustment screw with cover)								**T**						
Relieving with top cap (adjustment screw with cover, only for non-dangerous gases)								**V**						
Non-relieving with leakage line connection								**N**						
Relieving with leakage line connection								**L**						
Non-relieving with leakage line connection and top cap								**M**						
Relieving with leakage line connection and top cap								**P**						
MOUNTING OPTIONS														
Without panel mounting ring									**(1)**					
With panel mounting ring									**P**					
With bottom mounting									**B**					
PIPE CONNECTIONS														
Female threaded ISO 7 Rp (non-standard)											**A**			
Female threaded ISO 228											**B**			
Female threaded NPT ASME B1.20.1											**C**			
FLOW RATE COEFFICIENT														
Kvs 0,043												**1**		
Kvs 0,22												**2**		
Kvs 0,62												**3**		
SIZE														
1/4"													**08**	
SPECIAL CONSTRUCTION / ADDITIONAL OPTIONS														
A full description must to be provided and validated in case of a non-standard construction														**E**

(1) Omitted if a standard valve is requested.
(a) Valve head only, other seals in FPM or others on request.

We reserve the right to change the design and material of this product without notice.