TWO-WAY GLOBE CONTROL VALVES
V16/2
(ASME)

DESCRIPTION

The ADCATrol V16/2 is a series of single seated, two-way globe control valves designed for simple process engineering and industrial applications with non-critical operating conditions.
These valves can be assembled with pneumatic, hydraulic or electric actuators, for modulating and shut-off control tasks.



MAIN FEATURES

Compact and cost-effective.
Modular design to meet process requirements.
Stem guided (up to 2") and post guided (from 21/2" to 4").
Parabolic plug design.
Stainless steel trim.

OPTIONS AND ACCESSORIES:
Bonnet extension for high and low temperatures.
Various stem sealing options including bellows sealing.
Soft or stellited valve sealing.
Reduced bore trims.
Silencers.

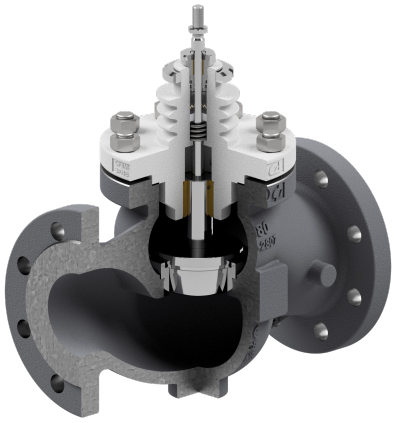

USE:
Saturated and superheated steam.
Hot and superheated water.
Air, gases and others.

AVAILABLE MODELS:
V16/2S – carbon steel.
V16/2i – stainless steel.

SIZES: 1/2" to 4".

CONNECTIONS: Flanged ASME B16.5 Class 150 or 300.

CE MARKING – GROUP 2 (PED – EUROPEAN DIRECTIVE)		
CLASS 150	**CLASS 300**	**CATEGORY**
1/2" to 2"	1/2" to 1"	SEP
21/2" to 4"	11/2" to 4"	1 (CE marked)

BODY LIMITING CONDITIONS *

V16/2S				V16/2i			
CLASS 150		CLASS 300		CLASS 150		CLASS 300	
ALLOW. PRESS.	RELAT. TEMP.	ALLOW. PRESS.	RELAT. TEMP.	ALLOW. PRESS.	RELAT. TEMP.	ALLOW. PRESS.	RELAT. TEMP.
19,3 bar	-10 / 50 ºC	50 bar	-10 / 50 ºC	18,4	-10 / 50 ºC	48,1	-10 / 50 ºC
15,8 bar	150 ºC	43,9 bar	200 ºC	14,4	200 ºC	35,8	200 ºC
12,1 bar	250 ºC	36,9 bar	350 ºC	12	350 ºC	30,4	350 ºC
8,4 bar	350 ºC	34,6 bar	400 ºC	8,4	400 ºC	29,3	400 ºC

* Rating according to EN 1759-1:2004.

We reserve the right to change the design and material of this product without notice.

LRQA CERTIFIED ISO 9001

BONNET DESIGN

STANDARD	EXTENDED
	
-10 to 250 ºC	Above 250 ºC

TRIM DESIGN

UNBALANCED TRIM

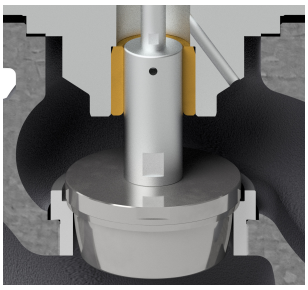

STEM SEALING

PTFE/GR V-RINGS (V1.2)	PTFE V-RINGS (V2.2)	EPDM (EP1)	GRAPHITE (G1)	BELLOWS	
				(BV1)	(BG1)
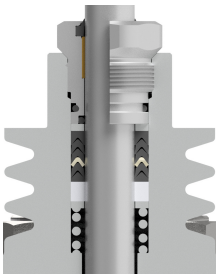	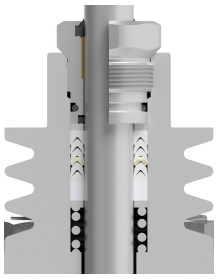	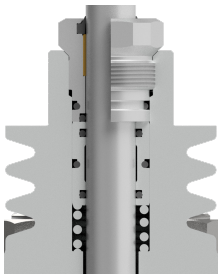	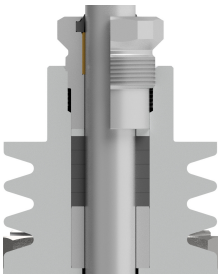	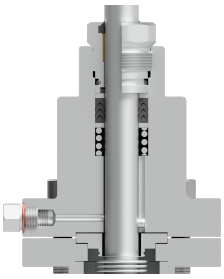	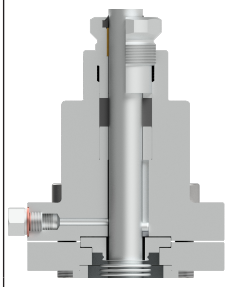
-10 to 220 ºC	-10 to 180 ºC	-10 to 150 ºC *	-10 to 400 ºC	-60 to 220 ºC **	-60 to 400 ºC **

* Up to 180 ºC in steam and hot water applications.
** Maximum operating pressure: 25 bar.

PLUG DESIGN

PARABOLIC

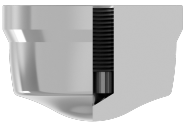

Sealing: Metal to metal
Characteristic: Equal percentage (EQP) or linear (PL)
Flow direction: From below
Rangeability: 50:1 (EQP) or 30:1 (PL)
Leakage: Class IV, acc. to IEC 60534-4

PARABOLIC (SOFT SEALING)



Sealing: PTFE/GR
Characteristic: Equal percentage (EQP) or linear (PL)
Flow direction: From below
Rangeability: 50:1 (EQP) or 30:1 (PL)
Leakage: Class VI, acc. to IEC 60534-4
Max. temp.: 200 ºC

FLOW RATE COEFFICIENTS – PARABOLIC PL AND EQP PLUGS

SIZE	Kvs (m³/h)										
	2,1	2,7	4	6,3	10	16	25	40	63	100	160
1/2"	•	•	•								
3/4"	•	•	•	•							
1"	•	•	•	•	•						
11/2"				•	•	•	•				
2"					•	•	•	•			
21/2"						•	•	•	•		
3"							•	•	•	•	
4"								•	•	•	•
SEAT Ø (mm)	12		15	19,2	25	32	38	48	65	76	96
STROKE (mm)	20								30		

For conversion Kvs = Cv (US) x 0,865.

We reserve the right to change the design and material of this product without notice.

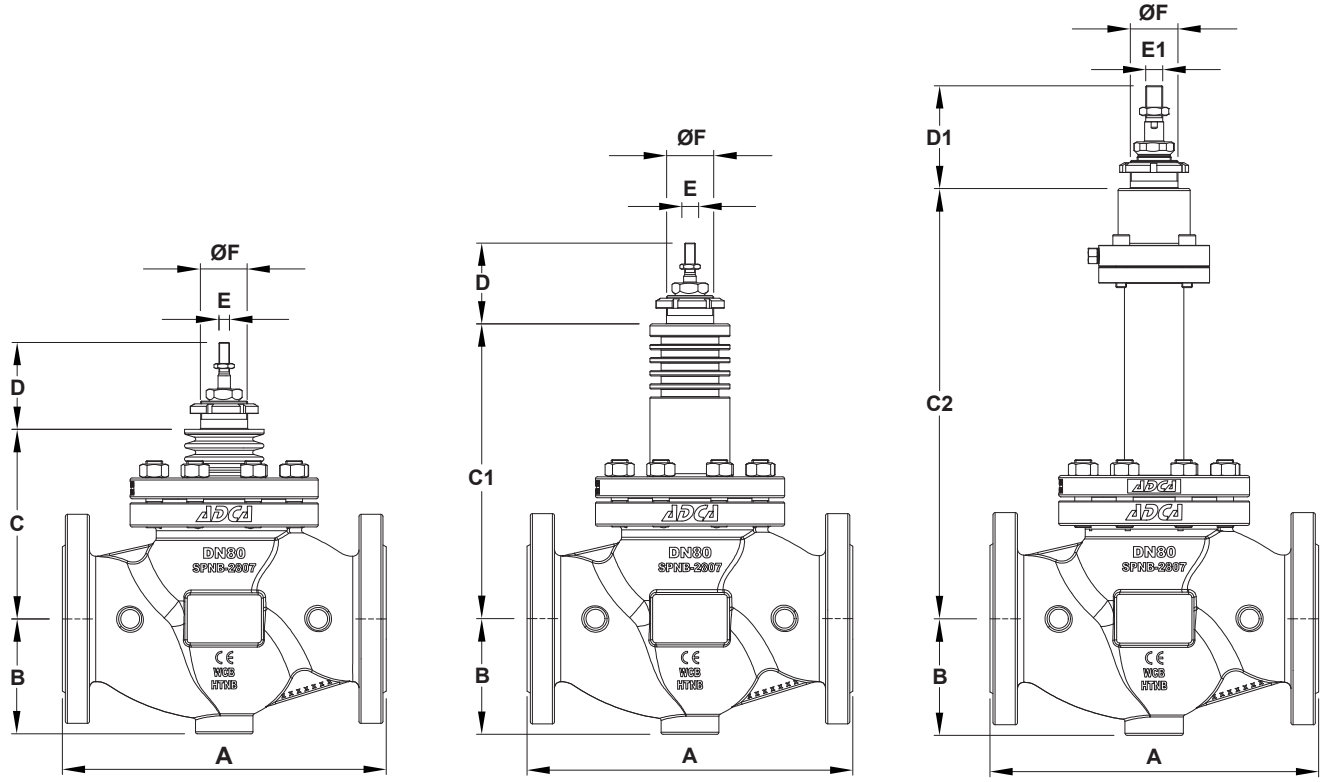

Valve with standard bonnet | *Valve with extended bonnet* | *Bellows sealed valve*

DIMENSIONS (mm)

DIMENSION		SIZE							
		1/2"	3/4"	1"	11/2"	2"	21/2"	3"	4"
A	CLASS 150	184 **(a)**	184 **(a)**	184	222	254	276	298	352
	CLASS 300	190 **(a)**	194 **(a)**	197	235	267	292	318	368
B	CLASS 150	44,5	49	54	65	85	100	110	130
	CLASS 300	47,5	58,5	62	78	85	100	110	130
C		85	85	90	115	125	176	175	190
C1		150	150	170	195	204	276	275	310
C2		314	314	322	317	317	415	442	451
D		77					82		
D1		77					92		
E		M10 x 1							
E1		M10 x 1					M16 x 1,5		
ØF		M40 x 1,5					M45 x 1,5		

(a) With welded-on flanges.
Remark: In the beginning of year 2022 new face to face dimensions have been defined for some Class 150 valves. Valves may still be supplied with the previous face to face dimensions under request. Consult the manufacturer.

WEIGHTS (kg)

OPTIONS		SIZE							
		1/2"	3/4"	1"	11/2"	2"	21/2"	3"	4"
STANDARD	CLASS 150	4,5	5	6,1	11,1	15,2	29,4	35	50,6
	CLASS 300	4,9	6	7,5	13,9	17,5	32,5	40,3	58,5
EXTENDED	CLASS 150	5,2	5,7	6,8	12,4	16,4	30,1	35,7	51,1
	CLASS 300	5,6	6,7	8,2	15,2	18,7	33,2	41	59
BELLOWS	CLASS 150	8,7	9,2	10,2	15,1	19	33,2	38,7	53,5
	CLASS 300	9,1	10,2	11,6	17,9	21,3	36,3	44	61,4

MAXIMUM PERMISSIBLE ACTUATING THRUSTS (kN)

	SIZE							
	1/2"	3/4"	1"	11/2"	2"	21/2"	3"	4"
MAX. THRUST	12							

We reserve the right to change the design and material of this product without notice.

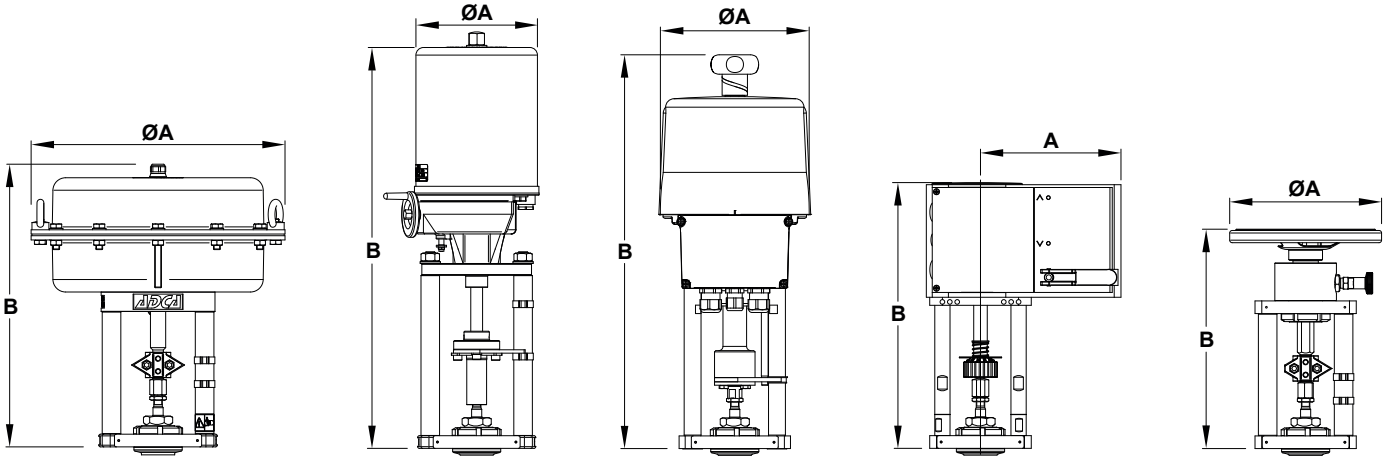

PA *EL* *ELS* *AV* *MAH*

DIMENSIONS – PA SERIES PNEUMATIC ACTUATORS (mm)				
DIMENSION	**PA10**	**PA25**	**PA40**	**PA80**
ØA	170	250	300	405
B	251	260	325 / 360	505 / 515 / 545
WEIGHT (kg)	6,3	10,1	18,7 / 19,2	50,4 / 55,4 / 59,3

For more information, please consult IS PA.010 – PA Linear pneumatic actuators.

DIMENSIONS – EL SERIES ELECTRIC ACTUATORS (mm)					
DIMENSION	**EL12**	**EL20**	**EL45**	**EL80**	**EL120**
ØA	129	148	148	188	188
B	351	474	474	572	572
WEIGHT (kg)	2,1	8	8	13	13

For more information, please consult IS EL.012 – EL Linear electric actuators.

DIMENSIONS – ELS SERIES ELECTRIC ACTUATORS (mm)					
DIMENSION	**ELS20**	**ELS45**	**ELS80**	**ELS100**	**ELS140**
ØA	180	180	180	180	180
B	503 / 530	503 / 530	540 / 570	540 / 570	615 / 635
WEIGHT (kg)	4,5	4,5	7,2	7,2	8

For more information, please consult IS ELS.020 – ELS Linear electric actuators.

DIMENSIONS – AV SERIES ELECTRIC ACTUATORS (mm)		
DIMENSION	**AVM234S**	**AVF234S**
A	166	166
B	314	314
WEIGHT (kg)	4,1	4,1

For more information, please consult IS AVM.010 – AVM234S-AVF234S Linear electric actuators.

DIMENSIONS – MAH SERIES MANUAL OPERATED ACTUATORS (mm)	
DIMENSION	**MAH180**
ØA	180
B	260
WEIGHT (kg)	4,8

For more information, please consult IS MAH.010 – MAH Manual operated linear actuators.

We reserve the right to change the design and material of this product without notice.

MATERIALS

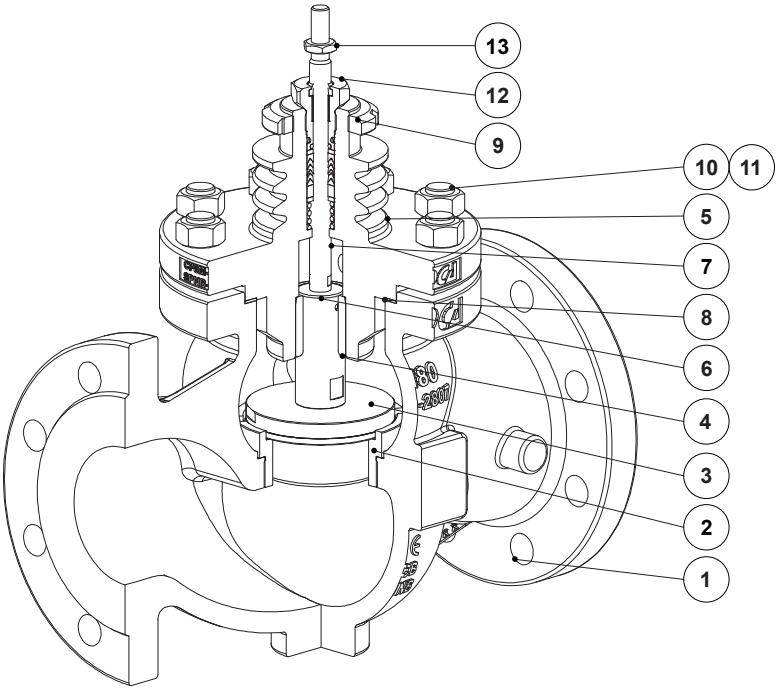

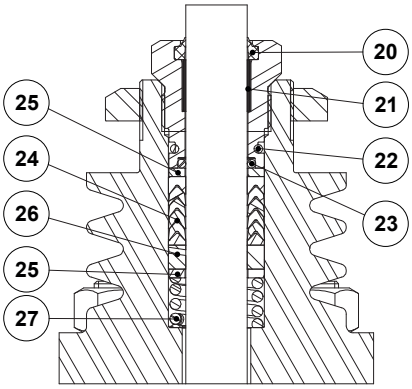

PTFE/GR V-Rings
(V1.2)

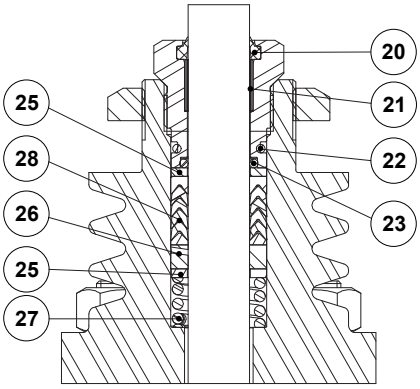

PTFE V-Rings
(V2.2)

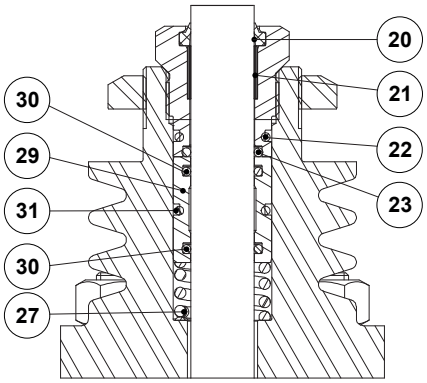

EPDM
(EP1)

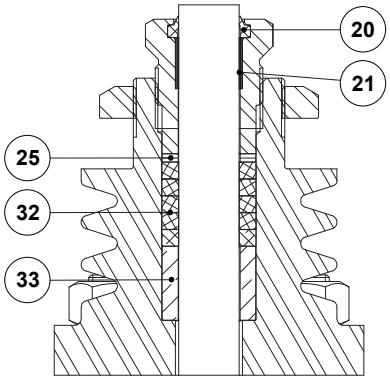

Graphite
(G1)

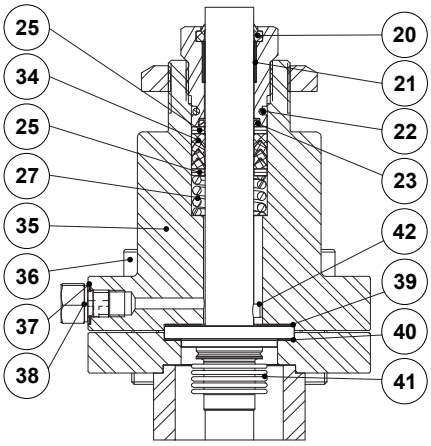

Bellows sealing
(BV1)

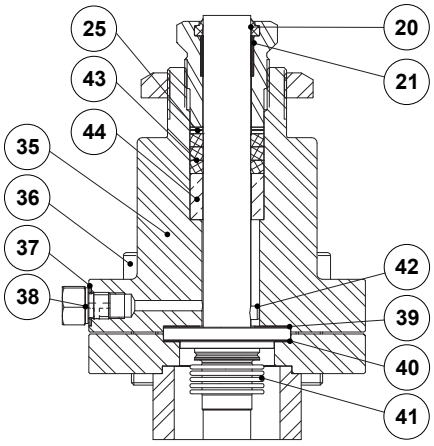

Bellows sealing
(BG1)

We reserve the right to change the design and material of this product without notice.

MATERIALS		
POS. No.	**DESIGNATION**	**MATERIAL**
1	Valve body (V16/2S)	A216 WCB / 1.0619
	Valve body (V16/2i)	A351 CF8M / 1.4408
2	* Seat	AISI 316L / 1.4404
3	* Valve plug	AISI 316L / 1.4404
4	Lower stem guide	** Bronze CB1
5	Bonnet (V16/2S)	A351 CF8M / 1.4408; A216 WCB / 1.0619
	Bonnet (V16/2i)	A351 CF8M / 1.4408
6	* Post stem (21/2" to 4")	AISI 316L / 1.4404
7	* Stem	AISI 316L / 1.4404
8	* Gasket	Stainless steel / Graphite
9	Lock nut	A351 CF8 / 1.4308
10	Nut (V16/2S)	EN 10269 steel
	Nut (V16/2i)	Stainless steel A2-70
11	Stud (V16/2S)	EN 10269 steel
	Stud (V16/2i)	Stainless steel A2-70
12	* Packing nut	AISI 303 / 1.4305
13	Lock nut	AISI 304 / 4.4301
20	* Scraper ring	FPM; NBR
21	* Plain bearing	Bronze / PTFE
22	* O-ring	EPDM
23	* O-ring	FPM
24	* Chevron packing set	PTFE; Graphite filled PTFE
25	Washer	AISI 304 / 1.4301
26	* Stem guide	Stainless steel filled PTFE
27	* Spring	AISI 302 / 1.4310
28	* Chevron packing set	PTFE
29	O-ring guide	AISI 304 / 1.4301
30	* O-ring	EPDM
31	* O-ring	EPDM
32	* Packing set	Expanded graphite
33	Packing spacer	AISI 304 / 1.4301
34	* Safety packing set	Graphite filled PTFE
35	Bellows bonnet (V16/2S)	A105 / 1.0432; AISI 316 / 1.4401
	Bellows bonnet (V16/2i)	AISI 316 / 1.4401
36	Bolt or stud and nut (V16/2S)	EN 10269 steel
	Bolt or stud and nut (V16/2i)	Stainless steel A2-70
37	Gasket	Copper
38	Plug	AISI 316 / 1.4401
39	* Gasket	Stainless steel / Graphite
40	* Gasket	Stainless steel / Graphite
41	* Metal bellows	AISI 316Ti / 1.4571
42	* Locking pin	AISI 303 / 1.4305
43	* Safety packing set	Expanded graphite
44	Packing spacer	AISI 304 / 1.4301

* Available spare parts.
** Can be produced in PEEK (Tmax. 250 ºC) on request.

We reserve the right to change the design and material of this product without notice.

ORDERING CODES V16/2 (a)

VALVE MODEL	V1	2	S	S	1	U	1	1	1	E	FD	U	015	
V16/2 – Globe control valve, two-way, straight body	**V1**													
VALVE SERIES														
Series 2		**2**												
BODY MATERIAL														
A216 WCB / 1.0619 carbon steel			**S**											
A351 CF8M / 1.4408 stainless steel			**I**											
BONNET DESIGN														
Standard				**S**										
Extended				**E**										
TRIM DESIGN														
Unbalanced trim					**1**									
FLOW DIRECTION														
Flow under the plug						**U**								
Flow over the plug						**O**								
STEM SEALING														
PTFE/GR V-Rings (V1.2)							**1**							
Virgin PTFE V-Rings (V2.2)							**2**							
Graphite (G1)							**3**							
EPDM (EP1)							**4**							
Stainless steel bellows with PTFE/GR safety packing (BV1)							**8**							
Stainless steel bellows with graphite safety packing (BG1)							**9**							
PLUG DESIGN														
Parabolic								**1**						
VALVE SEALING														
Metal to metal (class IV)									**1**					
Soft sealed with PTFE/GR (class VI)									**3**					
Stellited seat and plug (class IV)									**4**					
Stellited seat (class IV)									**5**					
CHARACTERISTIC														
Equal percentage (EQP)										**E**				
Linear (PL)										**L**				
FLOW RATE COEFFICIENT														
Kvs 4											**FD**			
See table below for other Kvs value codes														
PIPE CONNECTIONS														
Flanged ASME B16.5 Class 150												**U**		
Flanged ASME B16.5 Class 300												**V**		
SIZE														
1/2"													**015**	
3/4"													**020**	
...														
SPECIAL CONSTRUCTION / ADDITIONAL OPTIONS														
A full description must to be provided and validated in case of a non-standard construction														**E**

(a) Codification for valve only. For actuator codes, refer to the appropriate information sheet.

FLOW RATE COEFFICIENT CODES

Kvs	2,1	2,7	4	6,3	10	16	25	40	63	100	160
Code	R2	R1	FD	FE	FF	FG	FH	FI	FJ	FL	FM

We reserve the right to change the design and material of this product without notice.