HYGIENIC BALL VALVES
M3H
(1/2" to 2" – DN 10 to DN 50)

DESCRIPTION

The ADCAPure M3H three piece body ball valves are isolating valves designed for use with clean steam, condensate and other gases and liquids used in high purity and aseptic processes.
The valve is not designed as a control valve and should only be used as an isolating valve, fully open or fully closed.
The product is mainly designed for the pharmaceutical, biotech, semiconductor, cosmetics, fine chemical and food & beverage industries.



MAIN FEATURES

True or full bore floating ball design.
Can be serviced without removal from the pipeline.
Tube weld with loose body flanges (360º rotation after installation).
Bidirectional.
Antistatic device.
Anti blow out proof stem.
ISO 5211 mounting.



STANDARD SURFACE FINISH

Internal wetted parts: ≤ 0,51 µm Ra – SF1.
External: as casted.
Other surface conditions see TIS.GIA – General information ADCAPure.
Ultrasonic cleaning.



OPTIONS: Different sealing materials.
Degreased for oxygen use.
Cavity fillers.
Lever with locking system.
For more options and extras, consult IS M3H.100 – Sanitary Ball Valves Additional Options and Extras.

USE: Clean steam, gases and liquids compatible with the construction.

AVAILABLE MODELS: M3H – investment casting.

SIZES: 1/2" to 2"; DN 10 to DN 50.

CONNECTIONS: ASME BPE, DIN or ISO clamp ferrules, tube weld (ETO) ends or a combination of both.
Others on request.

PACKAGING: Assembling and packaging in a clean room certified according to ISO 14644-1.
The product is end capped and sealed with recyclable thermo-shrinkable plastic film to avoid contamination.

INSTALLATION: See IMI – Installation and maintenance instructions.

CE MARKING – GROUP 2 (PED – EUROPEAN DIRECTIVE)		
PN 63	**PN 100**	**CATEGORY**
DN 25 to 32	1/2" to 1" DN 10 to 20	SEP
11/2" to 2" DN 40 and 50	–	1 (CE marked)

We reserve the right to change the design and material of this product without notice.

PRESSURE / TEMPERATURE LIMITS

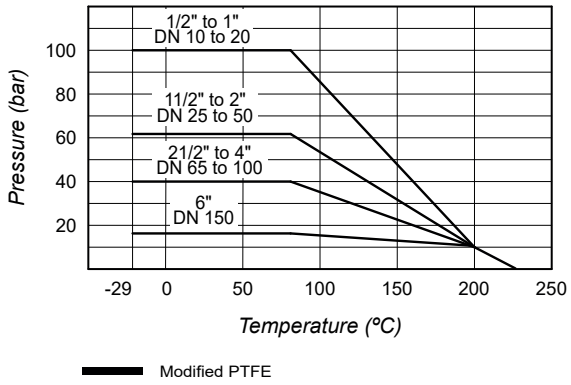

Remark: Maximum operating conditions may be limited by the valve end connections due to normative restrictions.

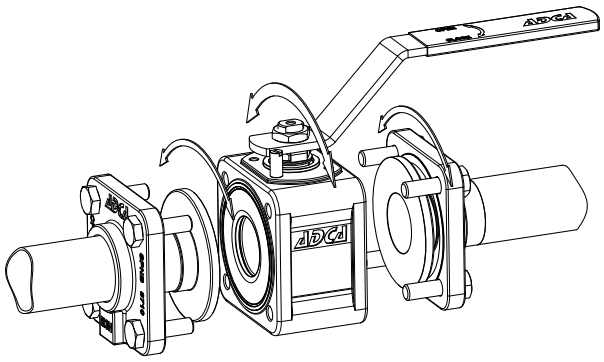

Tube weld easy and quick installation

Valves with tube weld (ETO) connections are fitted, as standard, with loose body flanges which allow installation with no need to align the end connections. After installation the valve can rotate freely 360º to the desired orientation.

LEVER OPTIONS

FLAT LEVER	FLAT LEVER WITH LOCKING SYSTEM
	

STEM EXTENSION UNITS *

SEF/H	SEF/P	SEF/A
	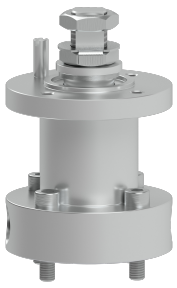	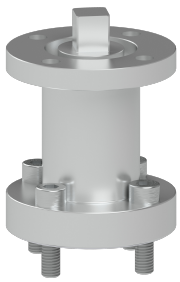

* Consult IS M3H.100 – Sanitary Ball Valves Additional Options and Extras – for further information.

We reserve the right to change the design and material of this product without notice.

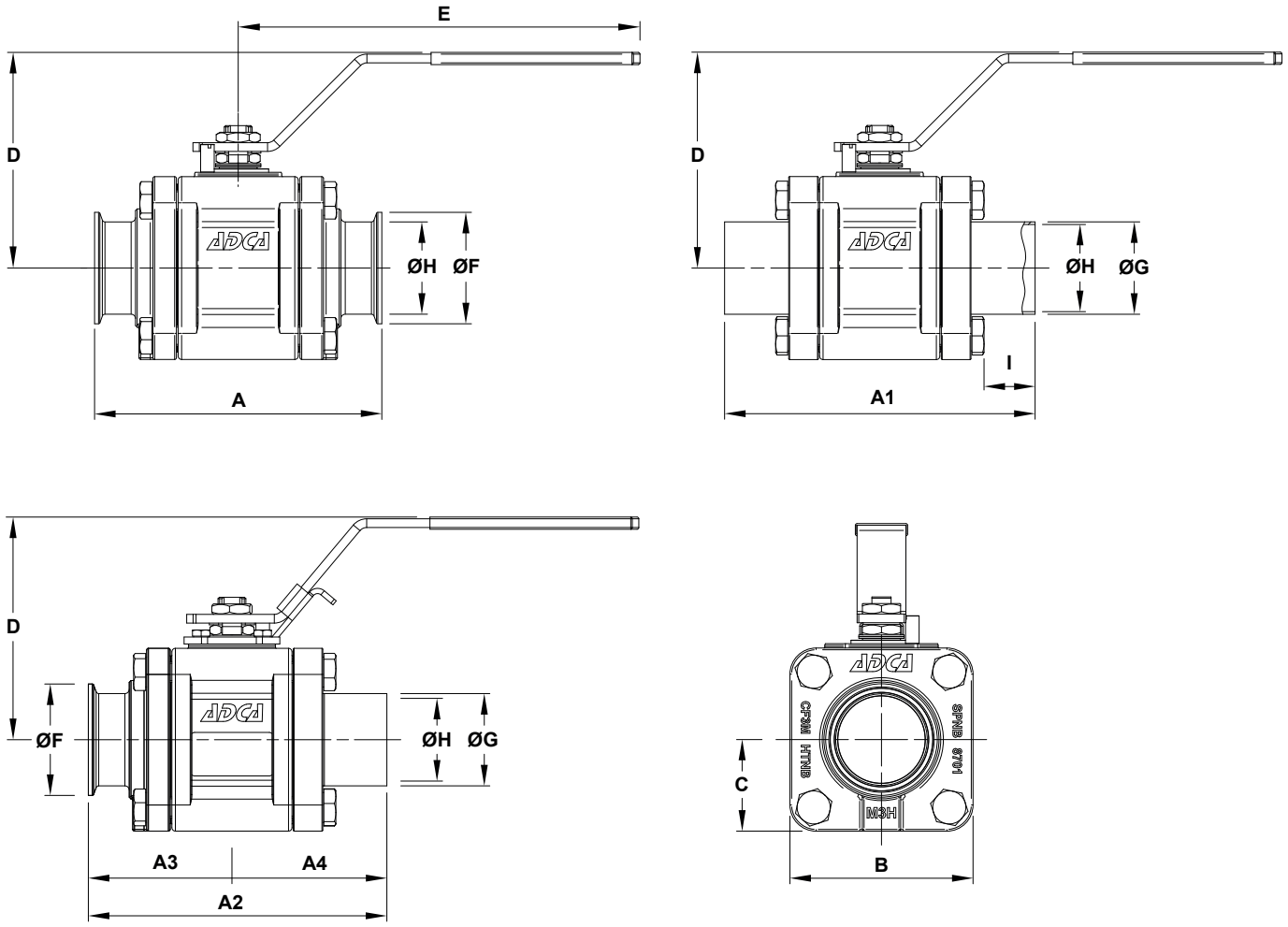

DIMENSIONS – ASME BPE (mm)																
SIZE	**A**	**A1**	**A2**	**A3**	**A4**	**B**	**C**	**D**	**E**	**ØF**	**ØG**	**ØH**	**I**	**BALL PORT**	**ISO 5211**	**WGT. (kg)**
1/2"	88,9	101,6	95,5	51,5	44	42	21	67	150	25	12,7	9,4	25	9,4	F03	0,5
3/4"	101,6	114,3	108	57	51	50	25	70	148	25	19,1	15,8	27	15,8	F03	1
1"	114,3	127	120,5	63,5	57	62	31	90	175	50,4	25,4	22,1	27	22,1	F04	2,2
11/2"	139,7	152,4	146,5	76,5	70	85	42,5	117	210	50,4	38,1	34,8	27	34,8	F05	4,4
2"	165,1	177,8	171,5	89	82,5	105	52,5	128	235	63,9	50,8	47,5	28	47,5	F05	7,4

DIMENSIONS – DIN (mm)																
SIZE	**A**	**A1**	**A2**	**A3**	**A4**	**B**	**C**	**D**	**E**	**ØF**	**ØG**	**ØH**	**I**	**BALL PORT**	**ISO 5211**	**WGT. (kg)**
DN 10	90	102	96	51	45	42	21	67	150	34	13	10	25	10	F03	0,8
DN 15	100	114	107	57	50	50	25	70	148	34	19	16	27	16	F03	1,6
DN 20	115	127	121,5	64	57,5	62	31	90	175	34	23	20	27	20	F04	2
DN 25	125	135	130,5	68	62,5	72	36	95	175	50,5	29	26	27	26	F04	2,7
DN 32	140	153	147	76	71	85	42,5	117	210	50,5	35	32	27	32	F05	4,5
DN 40	150	161	155	80	75	95	47,5	123	210	50,5	41	38	27	38	F05	5,6
DN 50	165	178	172	90	82	105	52,5	128	235	64	53	50	28	50	F05	7,1

We reserve the right to change the design and material of this product without notice.

DIMENSIONS – ISO (mm)															
SIZE	**A**	**A1**	**A2**	**A3**	**A4**	**B**	**C**	**D**	**E**	**ØF**	**ØG**	**ØH**	**I**	**BALL PORT**	**ISO 5211**	**WGT. (kg)**
DN 10	–	102	–	–	45	42	21	67	150	–	17,2	14	25	10	F03	0,8
DN 15	–	114	–	–	50	50	25	70	148	–	21,3	18,1	27	16	F03	1,6
DN 20	–	127	–	–	57,5	62	31	90	175	–	26,9	23,7	27	22,1	F04	2
DN 25	–	135	–	–	62,5	72	36	95	175	–	33,7	29,7	27	26	F04	2,7
DN 32	–	153	–	–	71	85	42,5	117	210	–	42,4	38,4	27	34,8	F05	4,5
DN 40	–	161	–	–	75	95	47,5	123	210	–	48,3	44,3	27	38	F05	5,6
DN 50	–	178	–	–	82	105	52,5	128	235	–	60,3	56,3	28	50	F05	7,1

MATERIALS

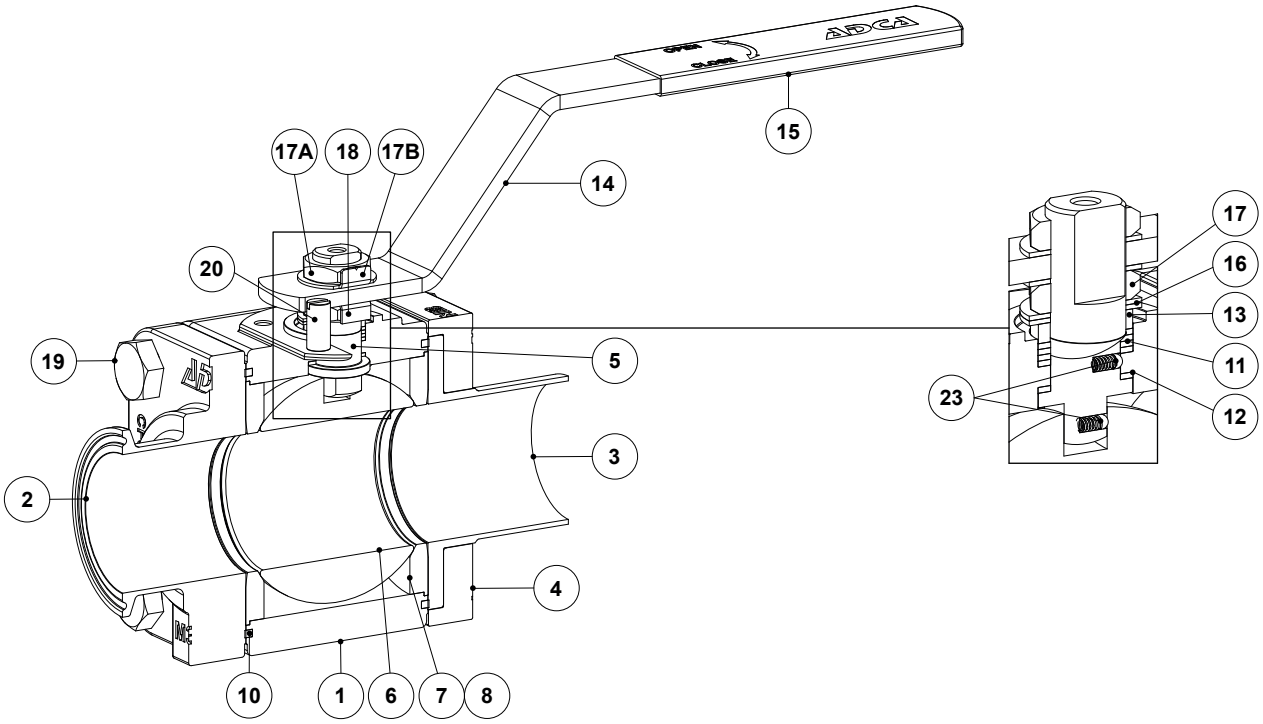

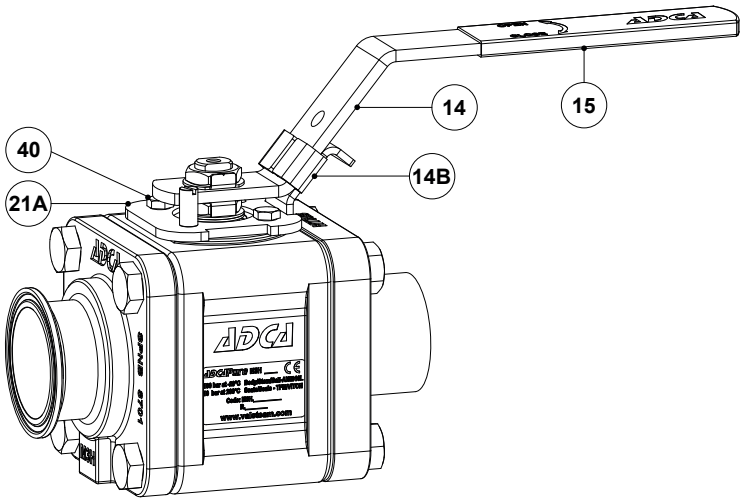

Optional flat lever with locking system

We reserve the right to change the design and material of this product without notice.

MATERIALS		
POS. No.	**DESIGNATION**	**MATERIAL**
1	Valve body	A351 CF3M / 1.4409
2	Clamp ferrule end connection	A351 CF3M / 1.4409
3	Tube weld end connection	AISI 316L / 1.4404; AISI 316L / 1.4435
4	Flange	A351 CF8M / 1.4408
5	Stem	AISI 316L / 1.4404
6	* Valve ball	AISI 316L / 1.4404
7	* Standard seat	Modified PTFE
8	* Cavity filler seat	Modified PTFE
10	* Body seal	PTFE
11	* Stem seal	Modified PTFE
12	* Stem thrust seal	Modified PTFE
13	* Spacer	AISI 316 / 1.4401
14	Handle	AISI 304 / 1.4301
14B	Locking piece	AISI 304 / 1.4301
15	Handle end	Vinyl
16	Spring washer	Stainless steel A2
17	Compression nut	AISI 304 / 1.4301
17A	Nut	AISI 304 / 1.4301
17B	* Lock washer	AISI 304 / 1.4301
18	Lock washer	AISI 304 / 1.4301
19	Body fixing bolt	Stainless steel A2-70
20	Stop pin	AISI 304 / 1.4301
21A	Locking flange	AISI 304 / 1.4301
23	Antistatic device	AISI 316 / 1.4401
40	Fixing bolt	Stainless steel A2-70

* Available spare parts.
Remarks: FDA / USP Class VI seals certificate on request.
All valves have a serial number. In case of non-standard valves, this number must be supplied if spare parts are ordered.

We reserve the right to change the design and material of this product without notice.

ORDERING CODES M3H											
VALVE MODEL	**MH**	**X**	**X**	**X**	**F**	**X**	**X**	**CB**	**X**	**15**	
M3H – A351 CF3M / 1.4409 Three piece ball valve	**MH**										
LEVER HANDLE											
Flat lever in stainless steel with plastic cover		**X**									
Flat lever in stainless steel with plastic cover and locking system		**3**									
Bare stem		**9**									
MATERIAL											
A351 CF3M / 1.4409			**X**								
A351 CF3M / 1.4409 with end connections in AISI 316L / 1.4435 **(a)**			**G**								
SEAT DESIGN											
Standard seats				**X**							
Cavity fillers				**F**							
SEAT MATERIAL											
Modified PTFE					**F**						
SURFACE FINISH (b)											
Standard surface finish						**X**					
Electropolished internal wetted parts (SF5)						**E**					
SPECIAL FEATURES											
None							**X**				
Degreased for oxygen							**O**				
Condensate drain connection – Clamp ferrule **(c)**							**C**				
Condensate drain connection – Tube weld (ETO) **(c)**							**T**				
PIPE CONNECTIONS											
Clamp ferrule ASME BPE								**CB**			
Clamp ferrule DIN (DIN 32676-A)								**CD**			
Tube weld (ETO) according to ASME BPE								**TB**			
Tube weld (ETO) according to DIN 11866-A (DIN 11850-2)								**TD**			
Tube weld (ETO) according to DIN 11866-B (ISO 1127)								**TI**			
TC/ETO combination ASME BPE								**CTB**			
TC/ETO combination DIN 32676-A / DIN 11866-A								**CTD**			
BALL PORT											
True bore (ASME BPE and DIN) or full bore (ISO)									**X**		
SIZE											
DN 10										**10**	
1/2" or DN 15										**15**	
3/4" or DN 20										**20**	
1" or DN 25										**25**	
DN 32										**32**	
11/2" or DN 40										**40**	
2" or DN 50										**50**	
SPECIAL CONSTRUCTION / ADDITIONAL OPTIONS											
Full description or additional codes have to be added in case of a non standard combination											**E**

(a) Only available with tube weld (ETO) ends.
(b) Consult TIS.GIA – General information ADCAPure – for further details and other surface finish options.
(c) According to ASME BPE, DIN or ISO depending on selected pipe end connections. Only available with standard seats.

We reserve the right to change the design and material of this product without notice.