FLOAT AND THERMOSTATIC STEAM TRAPS
FLT50 and FLT65

DESCRIPTION

The ADCA FLT50 and FLT65 are a series of high capacity float and thermostatic steam traps with integral air vent, designed for modulating discharge of condensate to ensure maximum system heat transfer. Specially designed for applications where continuous drainage is essential and high loads are involved.





MAIN FEATURES

High capacity.
Modulating discharge of condensate at steam temperature.
Unaffected by sudden or wide load and pressure variations.
No backing-up with condensate.
Excellent air discharge through its integrated thermostatic air vent.

OPTIONS:	Stainless steel construction. Drain connection. AFZ – Anti-freeze device. BDV – Blowdown valve.
USE:	Saturated and superheated steam.
AVAILABLE MODELS:	FLT50S and FLT65S – carbon steel.
SIZES:	FLT50S – 2" and 21/2"; DN 50 and DN 65. FLT65S – 21/2" to 4"; DN 65 to DN 100.
CONNECTIONS:	Flanged EN 1092-1 PN 16. Flanged ASME B16.5 Class 150.
INSTALLATION:	Angled horizontal installation. See IMI – Installation and maintenance instructions.

CE MARKING – GROUP 2 (PED – EUROPEAN DIRECTIVE)	
PN 16	**CATEGORY**
2" to 4" – DN 50 to 100	2 (CE marked)

BODY LIMITING CONDITIONS *	
FLANGED PN 16 / CLASS 150	**RELATED TEMPERATURE**
ALLOWABLE PRESSURE	
14,8 bar	100 ºC
13,3 bar	200 ºC
12,1 bar	250 ºC
11 bar	300 ºC

PMO – Maximum operating pressure: 12 bar.
TMO – Maximum operating temperature: 250 ºC.
Minimum operating temperature: -10 ºC.
* According to EN 1092-1:2018.

FLOW RATE CAPACITY (kg/h)																	
MODEL	SIZE	DIFFERENTIAL PRESSURE (bar)															
		0,1	0,3	0,5	1	1,5	2	2,5	3	3,5	4	5	6	7	8	10	12
FLT50S	2" and 21/2" DN 50 and 65	7500	10000	11300	12500	13500	15000	16000	17500	18500	20000	20500	21500	22000	22500	23000	23500
FLT65S	21/2" to 4" DN 65 to 100	18800	22700	24500	29000	31000	34000	37000	38000	39500	42000	43500	45500	47000	48000	49500	50000

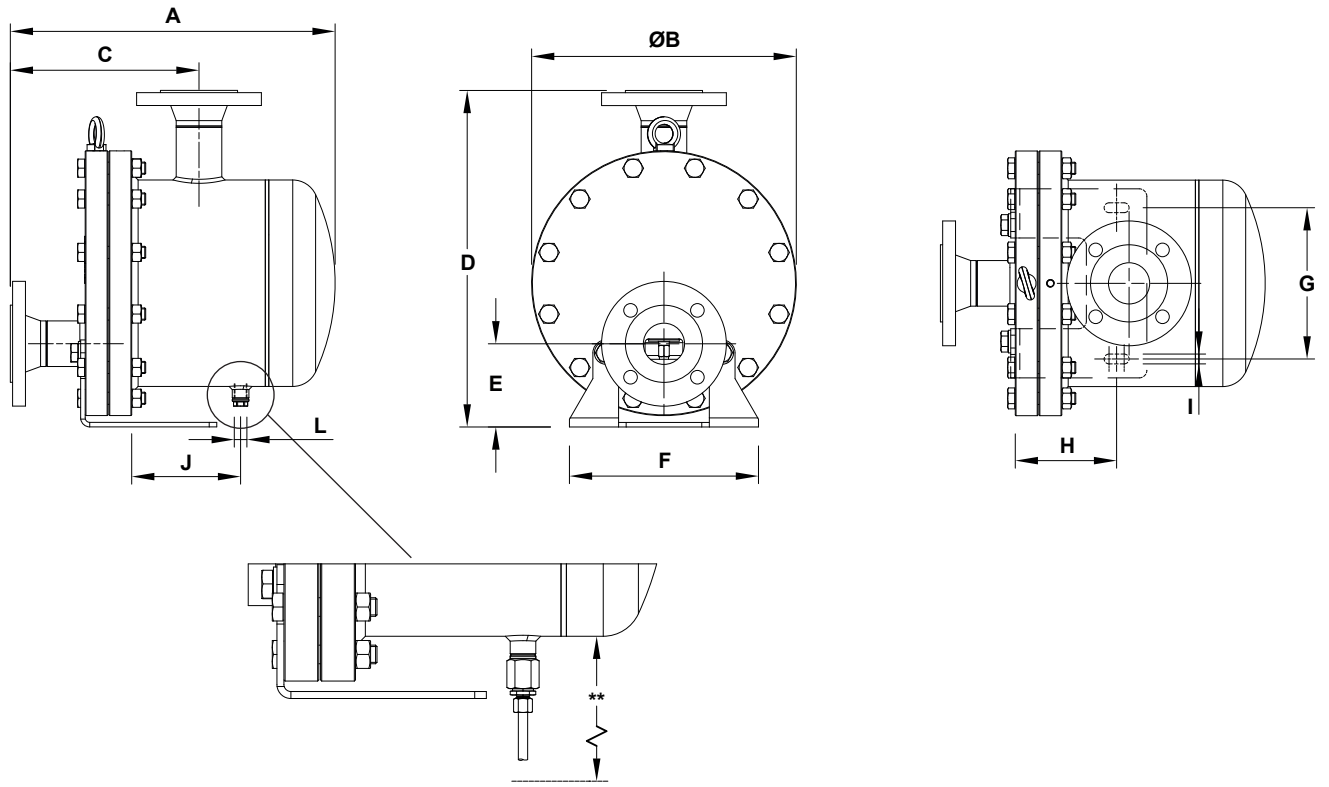

DIMENSIONS (mm)															
MODEL	SIZE	PN 16											CLASS 150		WGT. (kg)
		A	ØB	C	D	E	F	G	H	I	J	L *	A	C	
FLT50S	2" – DN 50	430	350	250	445	110	250	200	134	13	144	3/8"	445	265	57
FLT50S	21/2" – DN 65	460	350	280	445	110	250	200	134	13	144	3/8"	485	305	58,2
FLT65S	21/2" – DN 65	475	440	255	535	125	310	250	134	13	168	3/8"	500	280	92
FLT65S	3" – DN 80	506	440	286	535	125	310	250	134	13	168	3/8"	526	306	93,5
FLT65S	4" – DN 100	520	440	300	535	125	310	250	134	13	170	3/8"	544	324	96

* As standard, in versions with EN flanges, this connection is female threaded ISO 228. In versions with ASME flanges, this connection is female threaded NPT.

** In case an optional accessory is to be installed on the drain connection ensure there is enough clearance below the unit. A higher supporting frame can be supplied on request.

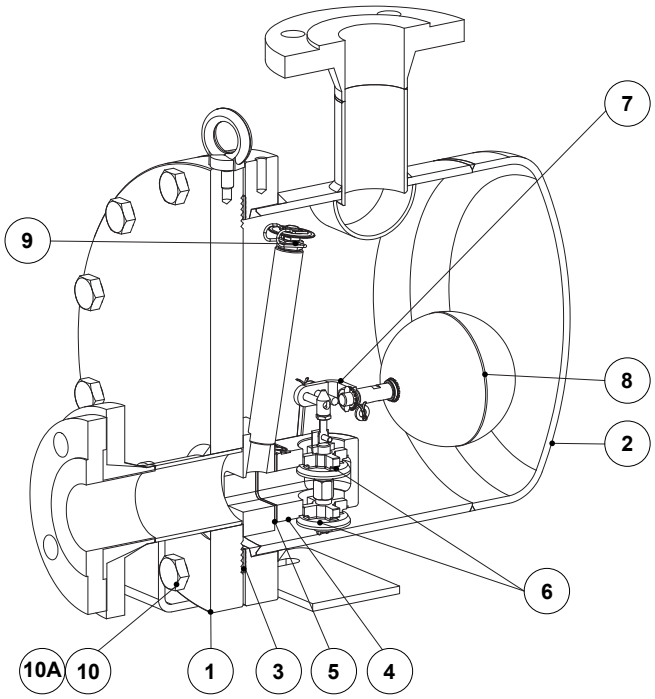

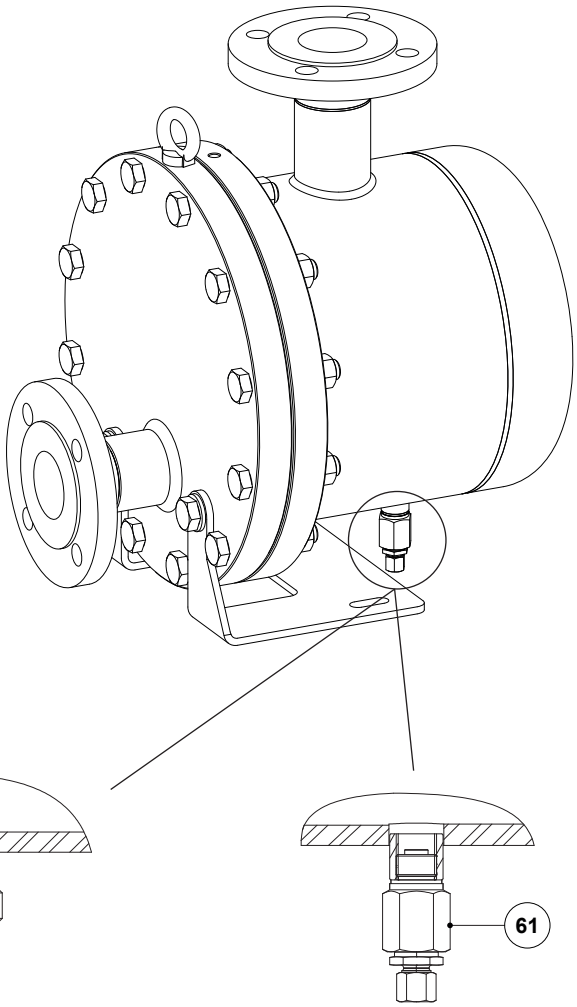

Optional blowdown valve (BDV); Manual

Optional anti-freeze device (AFZ); Automatic

MATERIALS		
POS. No.	**DESIGNATION**	**MATERIAL**
1	Body	P235GH / 1.0345; P250GH / 1.0460; S235JR / 1.0038; S355J2 / 1.0577; A105 / 1.0432
2	Cover	P235GH / 1.0345; P250GH / 1.0460; P265GH / 1.0425; S355J2 / 1.0577; A105 / 1.0432
3	* Gasket	Stainless steel / Graphite
4	* Seat	A351 CF8 / 1.4308
5	* Gasket	Stainless steel / Graphite
6	* Valve	CA-40 / 1.4027; AISI 410 / 1.4006
7	* Lever	AISI 316 / 1.4401; AISI 304 / 1.4301
8	* Float	AISI 304 / 1.4301
9	* Automatic air vent	Stainless steel (thermostatic)
10	Bolt	Steel 8.8
10A	Nut	Steel 8.8
51	Blowdown valve	AISI 303 / 1.4305; AISI 316L / 1.4404
61	Anti-freeze device	AISI 303 / 1.4305; AISI 316L / 1.4404

* Available spare parts.

We reserve the right to change the design and material of this product without notice.