AUTOMATIC AIR AND GAS VENTS FOR LIQUID SYSTEMS
AE37.2
(Carbon steel ; 11/2" x 1" and 2" x 1" – DN 40 x 25 and DN 50 x 25)

DESCRIPTION

The ADCA AE37.2 is a series of high capacity automatic vents designed to remove air or gases from water and other liquid systems, without requiring any external source of energy.
They are capable of handling significant loads during start-up while still being able to discharge smaller loads in continuous modulating operation with one single orifice.
These ball float type vents are manufactured in carbon steel, available with various soft sealing options, and can be used in combination with other air elimination and separation systems or directly applied at high points in the pipelines.



MAIN FEATURES

Suitable for start-up and continuous operation with one single orifice.
Allow fast and easy inline maintenance.
Corrosion resistant internal parts.
No balancing pipe required.



OPTIONS:	Various soft sealing options.
USE:	Cold, hot and superheated water or other liquids compatible with the construction.
AVAILABLE MODELS:	AE37.2-10, AE37.2-20 and AE37.2-32 – carbon steel.
SIZES:	11/2" x 1" and 2" x 1"; DN 40 x 25 and DN 50 x 25.
CONNECTIONS:	Female threaded ISO 7 Rp or NPT. Flanged EN 1092-1 PN 40. Flanged ASME B16.5 Class 150 or 300. Socket weld (SW) ASME B16.11.
INSTALLATION:	Inline vertical installation. It must be installed absolutely vertically at the points in the plant where the air tends to collect. See IMI – Installation and maintenance instructions.
ΔPMX:	AE37.2-10 – 10 bar AE37.2-20 – 20 bar AE37.2-32 – 32 bar



CE MARKING – GROUP 2 (PED – EUROPEAN DIRECTIVE)	
PN 40	**CATEGORY**
All sizes	1 (CE marked)

BODY LIMITING CONDITIONS		
FLANGED PN 40 / CLASS 300 *	FLANGED / CLASS 150 **	RELATED TEMPERATURE
ALLOWABLE PRESSURE	ALLOWABLE PRESSURE	
40 bar	19,3 bar	50 ºC
37,1 bar	17,7 bar	100 ºC
33,3 bar	14 bar	200 ºC
30,4 bar	12,1 bar	250 ºC
27,6 bar	10,2 bar	300 ºC

PMO – Maximum operating pressure: 32 bar.
TMO – Maximum operating temperature: EPDM valve sealing: 130ºC; FPM valve sealing: 200ºC.
Minimum liquid specific weight: 0,75 kg/dm³.
* According to EN 1092-1:2018; ** According to EN 1759-1:2004.
Body limiting conditions PN 40 or below, depending on the type of connection adopted. Rating PN 40 for threaded and SW versions.

FLOW RATE CAPACITY (NL/min)														
MODEL	SIZE	DIFFERENTIAL PRESSURE (bar)												
		0,1	0,5	1	3	5	7	10	12	16	20	24	28	32
AE37.2-10	11/2" x 1" – DN 40 x 25 2" x 1" – DN 50 x 25	97	212	266	519	777	1036	1425	–	–	–	–	–	–
AE37.2-20	11/2" x 1" – DN 40 x 25 2" x 1" – DN 50 x 25	67	147	184	384	540	720	989	1169	1528	1887	–	–	–
AE37.2-32	11/2" x 1" – DN 40 x 25 2" x 1" – DN 50 x 25	43	94	118	230	345	460	633	747	978	1208	1438	1668	1898

Values shown refer to capacities of air discharge at 15 ºC, under atmospheric pressure (1013 mbar).
If the air temperature differs from 15 ºC, the discharge capacity can be corrected by multiplying it by: $\frac{288}{273 + T}$, where T is the actual temperature in ºC.
It may be assumed that the temperature of the air is equal to the temperature of the water.

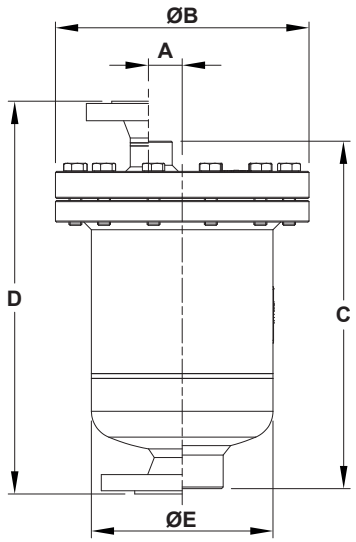

DIMENSIONS (mm)													
INLET *	THREADED					SW		PN 40		CLASS 150		CLASS 300	
OUTLET *	THREADED					SW		PN 40		CLASS 150		CLASS 300	
SIZE	A	ØB	C	ØE	WEIGHT (kg)	C	WEIGHT (kg)	D	WEIGHT (kg)	D	WEIGHT (kg)	D	WEIGHT (kg)
11/2" x 1" DN 40 x 25	31	235	320	168	20,7	336	20,9	364	23,5	369	22,9	382	24,8
2" x 1" DN 50 x 25	31	235	322	168	20,8	348	21,2	366	24,2	370	23,7	383	25,2

* For other combinations certified dimensions, consult the manufacturer.

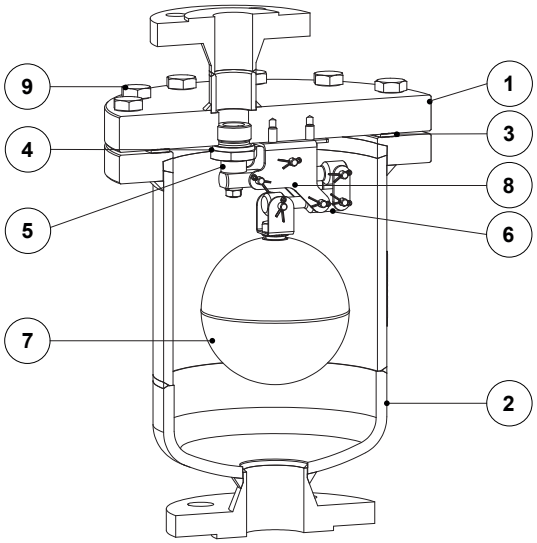

MATERIALS		
POS. No.	**DESIGNATION**	**MATERIAL**
1	Body	S355JR / 1.0045; P250GH / 1.0460; A105 / 1.0432
2	Cover	S355JR / 1.0045; P235GH / 1.0345; P265GH / 1.0425; P250GH / 1.0460; A105 / 1.0432
3	* Gasket	Stainless steel / Graphite
4	* Seat	AISI 316L / 1.4404
5	Plug	FPM or EPDM
6	* Lever	AISI 316 / 1.4401; AISI 316L / 1.4404
7	* Float	AISI 304 / 1.4301
8	* Mechanism support bracket	AISI 304 / 1.4301
9	Bolt	Steel 8.8

* Available spare parts.

FLOW DIRECTION

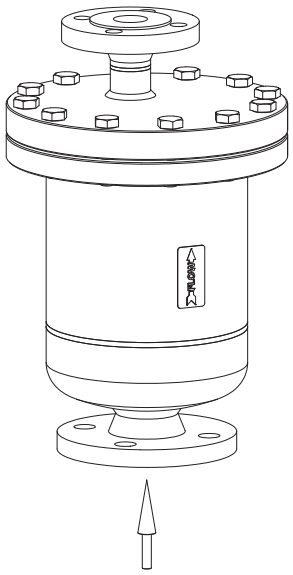

VT – Vertical from bottom to top

We reserve the right to change the design and material of this product without notice.

ORDERING CODES AE37.2										
MODEL	**AE372**	**3**	**E**	**XX**	**VT**	**A**	**25**	**A**	**40**	
AE37.2 – Carbon steel	**AE372**									
MAXIMUM ALLOWABLE DIFFERENTIAL PRESSURE (ΔPMX)										
10 bar		**3**								
20 bar		**5**								
32 bar		**7**								
VALVE SEALING										
EPDM			**E**							
FPM			**V**							
COVER CONNECTIONS										
None				**XX**						
OPTIONS										
If any, these have specific separate ordering codes, please refer to the appropriate documentation										
FLOW DIRECTION										
Inline vertical from bottom to top					**VT**					
OUTLET PIPE CONNECTION										
Female threaded ISO 7 Rp						**A**				
Female threaded NPT						**C**				
Socket weld (SW) ASME 16.11						**H**				
Flanged EN 1092-1 PN 40						**N**				
Flanged ASME B16.5 Class 150						**U**				
Flanged ASME B16.5 Class 300						**V**				
OUTLET SIZE										
1" or DN 25							**25**			
INLET PIPE CONNECTION										
Female threaded ISO 7 Rp								**A**		
Female threaded NPT								**C**		
Socket weld (SW) ASME 16.11								**H**		
Flanged EN 1092-1 PN 40								**N**		
Flanged ASME B16.5 Class 150								**U**		
Flanged ASME B16.5 Class 300								**V**		
INLET SIZE										
11/2" or DN 40									**40**	
2" or DN 50									**50**	
SPECIAL CONSTRUCTION / ADDITIONAL OPTIONS										
A full description must to be provided and validated in case of a non-standard construction										**E**

We reserve the right to change the design and material of this product without notice.